URBAN AND RURAL PLANNING ACT, 2000

RESOLUTION TO APPROVE

THE TOWN OF PASADENA

DEVELOPMENT REGULATIONS, 2019-2029

Under the authority of section 16, section 17 and section 18 of the *Urban and Rural Planning Act, 2000* the Town Council of Pasadena:

1. adopted the Development Regulations, 2019-2029, for the Town of Pasadena on the 20th day of July, 2020.

2. gave notice of the adoption of the Development Regulations, 2019-2029, for the Town of Pasadena by advertisement according to the Planning Circular from the Department of Environment, Climate Change and Municipalities by posting the Notice at the Town Hall, Pasadena Public Library and Pasadena Place Recreational Complex, and the Town mailed the Notice to every household and posted the Notice on the Town social media accounts for 30 days.

3. set the 2nd day of September 2020 for the submission holding of public hearing objections and submissions.

Now under the authority of Section 23 of the *Urban and Rural Planning Act 2000*, the Town Council of Pasadena approves the Development Regulations, 2019-2029, for the Town of Pasadena as amended according to the recommendations of the Commissioner's report dated October 19, 2020 as follows:

- Alderbrook Acres Limited: The objection dealt with the change in zoning for land situate between Pine Street and Foote Street (as shown in attached maps 'FROM' maps (for the Land Use Zoning map - attached); as the land was previously 'Residential Low Density', the Commissioner accepted the request by Alderbrook Acres Limited and recommended that the two parcels be reinstated as 'Residential Low Density' zone (as illustrated on the 'TO' maps for the Land Use Zoning map -attached);

- Two submissions regarding residential development of 43 Tipping Drive: (1) from the owners David and Lana Green and (2) from Joe and Lice Kennedy (parents of Lana Green). The site does not meet the Development Regulations standards in either the existing Development Regulations or the proposed Development Regulations, 2019-2029; therefore, this request was denied by Commissioner. The Commissioner recommended no change to the Development Regulations, 2019-2029.

SIGNED AND SEALED this 13 day of November, 2020.

Mayor: _____

Town Clerk: Shanon Brown

Development Regulations/Amendment

REGISTERED

Number 3685-2021-000

Date June 1, 2021

Signature _____

ATTACHMENT

Town of Pasadena
Changes to Development Regulations, 2019-2029
Land Use Zoning map

FROM:

PROPOSED 'AGRICULTURE' ZONE
(identified by white arrows)

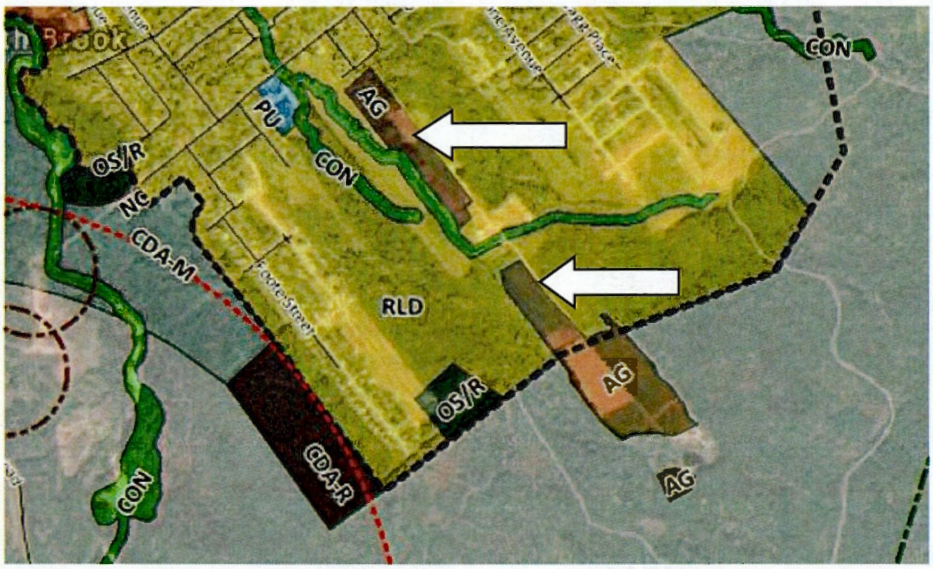

Yellow= RLD-Residential Low Density; Brown-AG-Agriculture

TO:

RESIDENTIAL LOW DENSITY ZONE

Yellow= RLD-Residential Low Density; Brown-AG-Agriculture

URBAN AND RURAL PLANNING ACT, 2000

RESOLUTION TO ADOPT

TOWN OF PASADENA

DEVELOPMENT REGULATIONS, 2019-2029

Under the authority of Section 16 of the *Urban and Rural Planning Act, 2000*, the Town Council of Pasadena adopts the Pasadena Development Regulations, 2019-2029.

The Development Regulations, 2019-2029 were adopted by the Town Council of Pasadena on the 20th day of July, 2020

Signed and sealed this 13 day of November, 2020.

Mayor: _____

Town Clerk: Sharon Brown

CANADIAN INSTITUTE OF PLANNERS (MCIP) CERTIFICATION

I certify that the Town of Pasadena Development Regulations, 2019-2029, has been prepared in accordance with the requirements of the *Urban and Rural Planning Act, 2000* of the Province of Newfoundland and Labrador.

Anna Myers, Member of Canadian Institute of Planners (MCIP)

ANNA MYERS CANADIAN INSTITUTE OF PLANNERS INSTITUT CANADIEN DES URBANISTES MCIP MICU

TABLE OF CONTENTS

1.0 AUTHORITIES AND RESPONSIBILITIES

Application

These Development Regulations apply to:

- all persons proposing to undertake a land use and/or development within the Planning Area boundary, whether residents or non-residents; and,
- the Mayor and Councillors and their delegates as they make land use and development decisions.

All development, including the subdivision/severance of land, carried out within the Planning Area must have a permit issued by Council in accordance with these Development Regulations.

Permit Responsibilities

Even though an applicant may receive a municipal development permit, the applicant is responsible for ensuring compliance with all relevant federal and provincial legislation, regulations, policies and guidelines prior to commencing a land use or development approved under these Development Regulations. Council may require proof of compliance prior to approval.

Amendment

An amendment to the text of the Development Regulations or rezoning of the Land Use Zoning Map, may be requested by any person, and the associated costs are borne by that person. The request shall be made to the Council, and they must follow the amendment process set out in the *Urban and Rural Planning Act, 2000* (Sections 14-24).

An amendment to the text of the Development Regulations or rezoning of the Land Use Zoning Map which **does not** requires an associated amendment to the Integrated Community Sustainability Plan does not follow the full process set out above; however, section 14 public consultation is required as part of the Council review process and this process along with the associated resolution of Council to adopt the amendment must be submitted in the required form to the Department of Municipal Affairs and Environment for Registration.

Legal Effect

Upon publication of the notice of registration of these Development Regulations in the Newfoundland and Labrador Gazette, the previous Development Regulations are hereby repealed and replaced.

These Regulations may be cited as the "Town of Pasadena Development Regulations 2017", prepared under the authority of Section 35 of the *Urban and Rural Planning Act, 2000* (hereinafter called 'the Act'). As required under Section 36 of the Act, the Ministerial Development *Regulations 03/01* are included in these regulations.

2.0 ADMINISTRATION OF THE REGULATIONS

This Section deals with the administration of processing permits for proposed land use and developments and outlines: when a permit is required, the process for making an application for a permit, the decision-making process by Council or it's delegate, including the conditions and requirements that may be attached to the permit, the appeal process, and the enforcement responsibilities of the Council.

Under Section 109 (2) of the Act, a council may appoint/designate an employee of Council to approve or reject applications to develop land in accordance with the plan and regulations and that employee may outline the conditions applicable to that development. Council shall make that designation in writing.

2.1 WHEN IS A PERMIT REQUIRED

All development, including the subdivision/severance of land, carried out within the Planning Area must have a permit issued by Council in accordance with these Regulations.

Development is defined in the *Urban and Rural Planning Act, 2000* as:

"...the carrying out of building, engineering, mining or other operations in, on, over or under land, or the making of a material change in the use, or the intensity of use of land, buildings or premises and the

i. making of an access onto a highway, road or way,
ii. erection of an advertisement or sign,
iii. construction of a building,
iv. parking of a trailer, or vehicle used for the sale of refreshments or merchandise, or as an office, or for living accommodation, and excludes the
v. carrying out of works for the maintenance, improvement or other alteration of a building, being works which affect only the interior of the building or which do not materially affect the external appearance or use of the building,
vi. carrying out by a highway authority of works required for the maintenance or improvement of a road, being works carried out on land within the boundaries of the road reservation,
vii. carrying out by a local authority or statutory undertakers of works for the purpose of inspecting, repairing or renewing sewers, mains, pipes, cables or other apparatus, including the breaking open of street or other land for that purpose, and
viii. use of a building or land within the courtyard of a dwelling house for a purpose incidental to the enjoyment of the dwelling house as a dwelling..."; and,
ix. "Subdivision means the dividing of land, whether in single or joint ownership into 2 or more pieces for the purpose of development". The requirements for subdivision development can be found in Section 8.

All development shall be carried out and maintained within the Planning Area in accordance with these Regulations and any other by-law or regulation enacted by Council.

2.2 APPLICATION FOR A PERMIT

2.2.1 Who can apply and how

An application for a *Permit* or for *Approval in Principle* shall be made only by the owner or by a person authorized by the owner to Council on such form as may be prescribed by Council.

Council shall, on request, supply to every applicant a copy of the application forms and a description of the plans, specifications, and drawings required to be provided with the application.

Council shall provide an applicant for a permit with available information and requirements applicable to the application.

Where Approval in Principle is granted under these Regulations, it shall be subject to the subsequent approval by Council upon the applicant's fulfilment of the details and conditions listed in the Approval in Principle, which shall be received *not later than one year* from the issuance of the Approval in Principle. If the details and conditions are not received, and there is no request for an extension (as per 2.5.5) then the Approval in Principle is void and the application is rejected.

2.2.2 Requirements for All Applications

An application for a Development (including Subdivision) permit shall contain the information needed to satisfy the applicable requirements in these Regulations.

2.2.2.1 Land use and development applications:

Every application shall include all information required to process the application in accordance with these Regulations:

- such plans, specifications and drawings as Council may require;
- the permit fee required by Council;
- location of the site on a map;
- details of proposed use: type, size and scale of operation, landscaping;
- lot area, lot frontage, siting of all structures, setbacks (existing/proposed), including site plans, location certificate for development, location of easements (if any);
- contours and viewscapes, particularly from the TransCanada Highway looking towards the southern slopes of the community;
- natural features such as wetlands, watercourses, drainage channels, and slopes that exceed 15 percent, unstable slopes, existing vegetation, trees and any other environmentally sensitive areas requiring protection;
- existing streets, buildings, and land uses in the vicinity of the site;
- a conceptual layout of proposed streets, trails, and other major components of the development;
- proposed access/egress, parking, loading requirements;
- proposed water supply, waste disposal and storm water drainage services; including the Canadian Drinking Water Guidelines;

- provide information regarding general conditions and standards for land use and development as outlined in subsection 4.1 indicating whether they are applicable (or not) and how they are addressed; and,
- a legal survey plan prepared by a registered Newfoundland and Labrador land surveyor.

2.2.2.2 Additional information for buildings

Where the application involves a building, the following information shall be added, as appropriate:

1. Application information regarding the buildings:
    a. siting of building on the lot, including building line setback and yards;
    b. bulk and height, in terms of floor area and building height;
    c. off-street parking, circulation, and loading, in terms of variables specified in Section 7.1; and,
    d. landscaping and buffers;

2. Following the pouring of foundation or building footings, a developer is required to provide the Town with a site survey and/or location certificate to verify the proper siting to the building with respect to property lines and building setbacks.

3. Upon completion of the construction of a building, compliance to all applicable building and other code requirements shall be verified by a letter addressed to the Town from the builder's/developer's professional engineer.

2.2.2.3 Un-subdivided Land:

Development is not permitted on un-subdivided land unless sufficient area is reserved to satisfy the yard and other allowances called for in the Use Zone in which it is located; these the allowances shall be retained when the adjacent land is developed.

2.2.2.4 Additional information requirements:

Where Council determines that further information is needed which requires a professional technical assessment (i.e., environmental, soils, steep slope, geotechnical, drainage, etc.), the work shall be conducted by a qualified professional registered in the Province of Newfoundland and Labrador who will provide a certified report and recommendations at the expense of the applicant.

The application will indicate how the proposed development(s) is compatible with the existing character of the neighbourhood and adjacent buildings, and in accordance with these Regulations.

2.2.2.5 Referrals

Where parcels overlap the Municipal Planning Area boundary of another community, a referral to the adjacent community (as a regulatory authority) is required.

Where the proposed development is located on or near a land use interest of another government agency, the Town will refer the application to the appropriate agency for comment prior to issuing the

permit. To determine where these interests are located, a useful resource is the provincial government Department of Fisheries and Land Resources, Land Use Atlas which can be found at the following link:

https://www.gov.nl.ca/landuseatlas/details/

2.2.3 Application Information Requirements for Discretionary Uses

Discretionary Uses may only be considered for an application to develop where:

- the Discretionary Use is stated in the applicable Use Zone table (Section 3); and,
- Council has, at the applicant's expense, published a notice in a newspaper circulating in the area of the application and considered any representations or submissions received in response to that advertisement;
- Council may also use social media, such as the Town Facebook page, to inform residents of the proposed discretionary use;
- Council, at its discretion, may contact adjacent landowners for input regarding the proposed discretionary use.

Discretionary Uses involving operation of a business/service, in addition to the information requirements for lots and buildings in 2.2.1, shall contain the following information relating to:

- floor area to be used for Discretionary Use,
- number of employees employed on site, and
- hours of operation.

2.2.4 Application Information Requirements for Comprehensive Development

In addition to the information in 2.2.2, the following requirements will apply to all proposed site developments involving new street construction or development of large sites for commercial (including commercial recreational), industrial, residential and public institutional development.

A Comprehensive Development application would normally include the following:

- Identification of Developable Area of site, indicating accommodation of site conditions such as poor drainage, steep slopes, flooding potential and rocky ground;
- Proposed siting of new buildings, or additions, including building square footage area size, building height, and setback distances to property lines;
- Building lot area coverage and floor area ratio where applicable;
- Total number of proposed multi-unit residential dwellings, or strata unit commercial and/or industrial units, and interior floor plans;
- Layout drawing of proposed parking area, total number and size of parking spaces and maneuvering aisles, access and egress locations to parking area, provisions for bicycle parking where applicable, landscape screening for parking areas and storm water drainage management;
- Identification of outdoor amenity and open space improvement areas;
- Identification of unenclosed storage areas and area size; and,
- Overview of landscaping treatment and approach for the site development.
- phasing of the development;

- Street and servicing layout, including on-site road pattern and traffic and relation to surrounding community in conformance with Town standards;
- Indicate any issues related to the long-term maintenance of streets and other services;
- Indicate fiscal benefits to the Town;
- Must meet the requirements of 4.1.4; and,
- if required, an amendment to the Municipal Plan and Development Regulations for adoption by the Council.

2.3 LAND USE ZONING AND DEVELOPMENT STANDARDS

2.3.1 Land Use Zones

The Planning Area is divided into Land Use Zones which are shown on the Zoning Map attached to, and forming part of, these Regulations.

The boundaries of the Use Zones shown on the Land Use Zoning Maps are general only and, except where they coincide with roads, shorelines, or other prominent physical features, are not intended to define exact limits. No zoning amendment shall be required in order to accommodate minor adjustments of the Use Zone boundaries. Other than such minor boundary adjustments, no development shall be permitted that does not conform to the Use Zone delineated on the Land Use Zoning Maps.

Where there is uncertainty regarding the existence of a watercourse identified on the zoning map, this can be confirmed in the field. If it is determined that the watercourse does not exist, the area in question will be treated as if it is occurring within the surrounding zone.

The following sections explain how to interpret the Use Zone Table for each zone in Section 3.

2.3.2 Land Use Zone Tables: Permitted and Discretionary uses

The Use Zone Tables in Section 3 set out the permitted, and discretionary uses for each Zone. The standards, requirements and conditions applicable to these Uses are set out in Sections 4, 5, 6 and 7. Council may exercise discretionary decision-making authority as per sections 2.5.12 and 2.5.13.

2.3.2.1 Permitted Uses

Subject to these Regulations, Permitted Uses set out in the Use Zone Table may be permitted by the Council in that Use Zone provided that it meets the development standards and requirements of the Development Regulations.

2.3.2.2 Discretionary Uses

The discretionary uses listed in the Use Zone Tables may be permitted at the discretion of Council, provided that they are complimentary to uses within the permitted use class, or that their development will not inhibit or prejudice the existence or the development of such uses. (Refer to the Development Standards set out in Sections 3, 4, 5, 6 and 7).

Council must be satisfied that the development would not be contrary to the general intent and purpose of these Regulations, the Municipal Plan, or any further scheme or plan or regulation pursuant thereto, and to the public interest.

Council is required to provide public notice of the application in accordance with Provision 2.6.3 and has considered any objections or representations which may have been received on the matter. It is recommended that Council notify the neighbouring property owners directly regarding the proposed discretionary use.

2.3.2.3 Accessory Uses and Accessory Buildings

As set out in Section 5, and Accessory Use means a use that is subsidiary to a permitted or discretionary use and that is customarily expected to occur with the permitted or discretionary use.

A permit is required for accessory uses and accessory buildings.

2.3.2.4 Uses Not Permitted

Uses that are not listed as Permitted or Discretionary Use on a Use Zone Table shall not be permitted in that Use Zone. As well, Council may also indicate Prohibited uses. Specific Prohibited uses include:

- Uses related to Adult Entertainment;
- Methadone dispensing clinics;
- The household keeping, commercial display and sales of exotic snakes and reptiles; and,
- Industrial activities that cause air-borne, terrestrial and marine environment pollution impacts.

2.3.2.5 Uses Permitted in All Land Use Zones

Notwithstanding 2.3.2.4, the following uses will be permitted in any land use zone:

- Conservation uses, including:
    - Environmental protection; and
    - Open space uses including parks and trails and lands set aside for environmental protection purposes - Refer to section 4.5.
- Mineral exploration not classed as 'Development' - Refer to 4.4.12. and as a Discretionary use in all zones: Mineral exploration classed as' development'.

Note that the definition of 'Development' excludes public utilities and infrastructure (4.8), (<u>excluding</u> cellular towers); therefore, these are allowed in all zones.

Condition:
Uses permitted in all land use zones must not create adverse impacts on adjacent land uses, and Council may require appropriate buffers, including landscape treatment between a public utility/infrastructure use and adjacent land uses.

2.3.3 Development Conditions and Standards

Development within the Planning Area must conform to:

- Policies set out in the Municipal Plan;
- Development standards set out in the Development Regulations:
- Standards and conditions set out in the specific Use Zones where the proposed development is located (Section 3.0);
- Land Use and Development standards (Section 4.0);
- Accessory Uses & Accessory Buildings, and Home Business standards (Section 5);
- Building, Siting and Servicing standards (Section 6.0);
- Off-street Parking and loading standards (Section 7.0);
- Standards regarding Signs (Section 7.0)
- Standards for Subdivisions (Section 8.0)
- Standards of design and appearance established by Council (Section 9).
- Standards set out in the National Building Code and ancillary codes (plumbing, electrical, etc.);
- Any other municipal regulation in force in the Planning Area regulating or controlling development, conservation and use of land and buildings;
- Requirements of federal and provincial legislation, regulations, and policy and guidelines.

If Council is aware that a proposed development may not comply with a particular provincial or federal act or regulation, it may require the applicant to provide confirmation that necessary government approvals have been obtained before issuing a development permit.

If Council deems that a proposed development may trigger the requirements of the *Environmental Assessment Regulations 2003,* the proponent will be advised to consult with the Environmental Assessment Division before a development permit is issued.

Where these Regulations are more stringent than a provincial or federal act of regulation, these Regulations will apply.

If the proposed development is not a use that is a permitted or discretionary use in the Zone where the land is located; then, the applicant may consider an application to rezone the property.

2.4 OPTIONS IF YOUR PROPOSAL DOES NOT FIT THE LAND USE ZONES OR DEVELOPMENT CONDITIONS/STANDARDS

2.4.1 Variances

Where the proposed development does not comply with the development standards set out in these Regulations, Council may, in its discretion, vary the applicable development standards to a maximum of ten percent (10%) if, in Council's opinion, compliance with the development standards would prejudice the proper development of the land, building, or structure in question or would be contrary to public interest.

Council shall not allow a variance from development standards set out in development regulations if that variance, when considered together with other variances made or to be made with respect to the

same land, building, or structure would have a cumulative effect that is greater than a ten percent (10%) variance even though the individual variances are separately no more than ten percent (10%);

Council shall not permit a variance from the development standards where the proposed use would increase the non-conformity of an existing development or would result in the creation of non-conformity of any existing legal development.

Where Council is to consider a proposed variance, Council shall give written notice of the proposed variance from development standards to all persons whose land is in the immediate vicinity of the land that is the subject of the variance, and allow a minimum period of seven (7) days for response.

2.4.2 Infill Development

Council will encourage infill development in serviced areas, subject to the following requirements:

- the type, scale, massing, and design of the development is generally appropriate to the neighbourhood;
- preservation of side/back/front yards for public safety requirements; and,
- adequate provision is made for light, privacy, and amenity.

Where a proposed development constitutes infill between existing developments, Council may consider changes to the lot area, building line setback, and frontage based on the land capability to accommodate servicing requirements; and also ensure that the building line setback is consistent with adjacent properties and the general area.

Such infill proposals must be consistent with adjacent development and not compromise public safety, neighbouring services, or the general amenity of the area.

2.4.3 Non-Conforming Uses or Non-Conforming Development

(Refer to Section 108(2) of the *Urban and Rural Planning Act 2000* and Sections 14, 15, and 16 of the *Ministerial Development Regulations* found in Appendix A and B)

Any legal use of land or development at the date of the registration of these Regulations, although not conforming, either due to zoning or development standards) may:

- be continued, or;
- be varied to a use that is more compatible with the plan and regulations, if:
    - Council has, at the applicant's expense, published a notice in a newspaper circulating in the area of the application and considered any representations or submissions received in response to that advertisement; and,
    - if it is Council's opinion that the new use is more compatible with the permitted use(s) in the Use Zone in which the building is located.

Conditions regarding a non-conforming use of land or development:

a) Shall not be internally or externally varied, extended or expanded unless otherwise approved by Council;
b) Shall not be structurally modified except as required for the safety of the building, structure or development,
c) Shall not be reconstructed or repaired for use in the same non-conforming manner where 50% or more of the value of that building, structure or development has been destroyed, except as provided for in Paragraph (g) below,
d) May have the existing building extended by Council where, in Council's opinion that extension is not more than 50% of the existing building,
e) Where the non-conformance is with respect to the standards in these Regulations, shall not be expanded if the expansion would increase the non-conformity,
f) may have the existing use for that building, structure or development varied by the appropriate council, regional authority or authorized administrator to a use that is, in their opinion more compatible with a plan and regulations applicable to it;
g) where the building, structure, or development is primarily zoned and used for residential purposes, may, in accordance with the appropriate plan and regulations, be repaired or rebuilt where 50% or more of the value of that building or structure is destroyed, and
h) A residential building or structure referred to in Paragraph (g) must be repaired or rebuilt in accordance with the plan and development regulations applicable to that building or structure.

If a non-conforming development or land use is discontinued after these Regulations came into legal effect, a right to resume a discontinued non-conforming use of land shall not exceed one year after the discontinuance occurred, unless otherwise specified by Council. For the purpose of this Regulation, discontinuance of a non-conforming use begins when any one of the following conditions is met:

- The building or use of land is clearly vacated or the building is demolished,
- The owner or tenant has ceased paying business taxes for that use, and
- The owner or tenant has stated in writing that the use has ceased.

2.4.4 Amendment to Development Regulations

An amendment to these Development Regulations may be requested by any person, and shall be submitted to the Council. Note that this might also require an associated amendment to the Municipal Plan. All costs for the amendment are to be borne by the person requesting the amendment, except when initiated by Council.

Where an application for an amendment involves private property, the application shall be made by the property owner or a person operating under the owner's written consent. A copy of this written consent must accompany the application for an amendment to the text of the Development Regulations or rezoning of the Land Use Zoning Map.

Where a Plan amendment and/or zone change is for a specific development proposal, or where more site specific and detailed information on the type and nature of future development is required, all, or some, of the following criteria may be considered:

- all of the criteria listed in the policies of the Plan;
- the height, location and spacing of any buildings in the proposed development, and any potential impacts on surrounding land uses;

- the location of vehicular access points the likely impact of traffic generated by the proposal on streets, pedestrian and vehicular safety, and on surrounding properties;
- the exterior design in terms of bulk, scale, and layout of buildings, and the integration of these uses with present and future land uses in the area;
- the potential impact of the development on surrounding natural features and heritage resources;
- compliance of the proposed development with the provisions of the Town's Municipal Plan and Development Regulations; and,
- measures planned by the applicant to mitigate any adverse impacts on surrounding land uses and streets which have been identified as part of the Planning Impact Analysis.

2.5 COUNCIL DECISION-MAKING

2.5.1 Timely Decision-making

Applications properly submitted in accordance with these Regulations which have not been determined by Council and on which a decision has not been communicated to the applicant within sixty (60) days of the application being received by Council, shall be deemed to be refused.

2.5.2 Deferment of Application:

Council may, with the written agreement of the applicant, defer consideration of an application.

An application properly submitted in accordance with these Regulations shall be determined within 60 days of the receipt thereof by Council or shall be deferred.

Council may defer decisions on an application for a Development Permit and/or an application for an amendment to these Regulations within a specified area where Council has directed that a planning study or other similar study pertaining to the future use and development of the specified area be undertaken.

An application may be withdrawn only on receipt of a written request from the applicant.

2.5.3 **Public Notice** (Refer to Ministerial Development Regulations, Sections 13 & 15)

Council must, at the applicant's expense (Section 35 (1) of the Act), publish a notice in a newspaper circulating in the area of the application and consider any representations or submissions received in response to that advertisement, when an application is received regarding:

- A *change in a non-conforming use*; notice of an application to change a non-conforming use will be by advertisement in a newspaper circulating in the area, and a minimum of seven (7) days will be provided for persons to respond.
- A proposed development is listed as *a discretionary use*; notice of an application to change a non-conforming use will be by advertisement in a newspaper circulating in the area or by other reliable means give public notice, and a minimum of seven (7) days will be provided for persons to respond.

- A *comprehensive development* is proposed; Council will publish a notice in a newspaper circulating in the area or by other reliable means give public notice, and will provide a minimum of fourteen (14) days for persons to respond; or,
- *Council determines that the public should be notified of an application*; notice of the application will be by advertisement in a newspaper circulating in the area or by other reliable means give public notice, and a minimum of seven (7) days will be provided for persons to respond.
- A *Planning Impact Analysis* is proposed; Council will publish a notice in a newspaper circulating in the area or by other reliable means give public notice, and will provide a minimum of fourteen (14) days for persons to respond;

Notification regarding a variance will be carried out as follows:

- written notice of a variance application will be given directly to persons whose land is in the immediate vicinity of the land that is the subject of the variance who are likely to be affected (Minister's Development Regulations-see Appendix) and a minimum of seven (7) days will be provided for persons to respond;

2.5.4 Briefing Sessions

Council may require a public meeting to be held in respect of any matter arising under these Regulations.

Council may advertise or require the applicant to advertise the application by a minimum of one (1) advertisement in a newspaper circulating in the local area at least ten (10) calendar days prior to the holding of a briefing session where the application shall be discussed.

The newspaper notice shall: (a) contain a general description of the application; (b) specify the date set for the briefing session at which the application is to be discussed; (c) specify the date set for receipt of written representation on the application by the Town; (d) identify the place and time where the application can be viewed by the public; and (e) specify that Council shall cancel the briefing session if no written response is received by the deadline for the receipt of responses.

Council may make such effort as it deems reasonable to provide that written notices are mailed to the addresses of property owners, as identified on the current Town's assessment role, within a radius of at least one hundred and fifty metres (150 m) from the application site, a minimum of fourteen (14) calendar days prior to a briefing session where such application is discussed.

Notes of the proceedings of the briefing session shall be undertaken and these notes, together with any written representations, shall be considered by Council when it makes its decision on the matter, which is the subject of the briefing session.

An elected member of Council shall act as Chairperson of the briefing session.

2.5.5 Approval in Principle

Council may grant an approval in principle if it determines that the proposed development complies generally with the intent and purposes of the Municipal Plan and these Regulations.

Council will attach to the approval in principle such conditions that it deems necessary to ensure the proposed development will be in accordance with the Plan and these Regulations. It will also outline such details that the applicant will be required to address before a final development permit will be granted.

An approval in principle will be valid for a period of one (1) year and may be extended for one (1) additional year, up to a maximum of two (2) years.

Where approval in principle is granted, approval of a final development permit will be subject to the subsequent approval by Council of any details and conditions that were outlined in the approval in principle.

Approval in principle will not constitute permission to commence development. No form of development will commence until Council has issued a proper development permit.

Council may revoke approval in principle if it determines that the applicant has changed the proposed development in a way that significantly alters the original intent of the application or has not adequately addressed conditions or details stipulated in the approval in principal.

A decision by Council on an application for an approval in principle can be appealed in accordance with Section 42 of the Act.

2.5.6 Approval of Development Permit

1. A written development permit issued by Council or its designated staff will constitute permission to develop in accordance with these Regulations, but such permission shall not relieve the applicant from full responsibility for obtaining all other permits or approvals prior to commencement of development and complying with all other regulations and statutes during development.
2. Council may attach conditions to a development permit to ensure compliance with the Municipal Plan and these Regulations, and the permit holder will be responsible for full compliance with these conditions. When approving an application for a discretionary use, Council shall state in writing the basis for its approval.
3. Where the development is a building(s), following the pouring of foundation or building footings, a developer is required to provide the Town with a site survey and/or location certificate to verify the proper siting of the proposed building with respect to property lines and building setbacks.
4. A permit is valid for such period, not in excess of two years, as may be stated therein, and if the development has not commenced, the permit may be renewed for a further period not in excess of one year, but a permit shall not be renewed more than once; except for Signs (see Section 7.3).
5. The issuance of a development permit does not prevent Council thereafter from requiring the correction of errors, or ordering the cessation or removal of, or remedial work on, any development that is in violation of the Municipal Plan or these Regulations or any other regulations or statute.
6. Council may revoke a permit for failure by the holder of it to comply with these Regulations or any condition attached to the permit or where the permit was issued in error or was issued on the basis of incorrect information.

7. No person shall change the application for which a development permit was issued unless written approval of the change has been issued by Council.
8. A copy of the development permit, along with plans and specifications, shall be kept on the site until the development is completed.
9. Council may revoke a development permit if it determines that the applicant has changed the proposed development in a way that significantly alters the original intent of the application or has not adequately addressed conditions or details stipulated in the approval in principal.
10. A decision by Council on an application for an approval can be appealed in accordance with Section 42 of the Act (Refer to Section 2.7).

2.5.7 Temporary Use Permit

Definition: means a development or the use of land limited in scope, duration and frequency and is allowed to operate on a short-term basis, such as, a temporary outdoor market.

Standards: At its discretion, Council may issue a development permit for a temporary use, which must comply with the Municipal Plan and these Regulations. The permit may be for a period not exceeding one (1) year and may be extended at the request of the applicant for one (1) additional year, up to a maximum of two (2) years.

2.5.8 Correction of Errors and Remedial Work

The approval of any plans or drawings or the issuance of a Development Permit or permit shall not prevent Council or any officer from thereafter requiring the correction of errors or from ordering the cessation of, or remedial work on any development being carried out in the event that the same is in violation of these or any other regulations or statutes.

2.5.9 Revoke Permit

Council or any officer may revoke an approval and any subsequent permits for failure by the holder, to comply with these Regulations or any condition attached to the permit or where the permit was issued contrary to the applicable regulations or was issued on the basis of incorrect information.

2.5.10 Fee for Permit

Council may charge a fee for a development permit in accordance with the annual schedule of fees adopted by Council.

2.5.11 Written Reasons for Refusing or Setting Conditions on a Permit

Council shall, when refusing to issue a permit or attaching conditions to a permit, state the reasons for so doing. The Council shall also advise the applicant of their right to appeal in accordance with Section 42 of the Act.

2.5.12 Refusal: Premature development

No permit shall be issued for development within the Planning Area when:

- in the opinion of Council, it is premature by reason of the site lacking adequate road access, power, drainage, sanitary facilities, or domestic water supply, or being beyond the natural development of the area at the time of application,
  UNLESS
- the applicant contracts to pay the full cost of construction of the services deemed necessary by Council and such cost shall attach to and upon the property in respect of which it is imposed.

Where a Development Permit application for a land or building development or for an amendment to the Development Regulations has been effectively denied by a resolution of Town Council, application for the same development, building or amendment shall not be considered within 12 months of the date of the previous refusal.

2.5.13 Discretionary Decision-making Powers of Council

In considering an application for a permit to carry out development, Council shall take into account the policies expressed in the Municipal Plan and any further scheme, plan or Regulations pursuant thereto, and shall assess the general appearance of the development of the area, the amenity of the surroundings, availability of utilities, public safety and convenience, and any other considerations which are, in its opinion, material, and notwithstanding the conformity of the application with the requirements of these Regulations, Council may, in its discretion, and as a result of its consideration of the matters set out in this Regulation, conditionally approve or refuse the application.

The exercise of discretionary powers does not enable Council to permit the development of a use that is not set out as a permitted use or a discretionary use in the Zone where the proposed land use or development is located, except when it considers that a proposed use is sufficiently similar to a permitted or discretionary use, *and* in accord with the general intent of the Municipal Plan and the applicable Use Zone.

2.5.14 Register

Council shall keep a register of all applications for development and shall enter therein Council's decision upon each application and the result of any appeal from that decision.

2.6 SPECIAL CONDITIONS FOR DEVELOPMENT

2.6.1 Development Agreement

Where a Development Agreement is required as a condition of a Development Permit, the Development Agreement shall set out the terms specific to that agreement and shall be signed by the applicant and Council within one year of the approval granted by Council. Development cannot proceed until all conditions of the Development Permit are met and the Development Agreement is signed by the applicant and Council.

2.6.2 Planning Impact Analysis for Plan

Council may require a Planning Impact Analysis to evaluate any proposed land use, development and/or situation that affects the policies contained in the Municipal Plan.

Planning Impact Analysis will be used to evaluate applications for a plan amendment and/or zone change, to determine the appropriateness of a proposed change in land use, and to identify ways of reducing any adverse impacts on surrounding land uses. Planning Impact Analysis is intended to document the criteria reviewed by municipal staff through the application review process to assess an application for change. Depending upon the situation, other criteria may also be considered.

The Terms of Reference for a Planning Impact Analysis shall be approved by Council prior to its execution, and shall become an integral part of the report itself. The report and any supporting studies may be prepared at the expense of the applicant, at Council's discretion.

An applicant for a proposed change in land use may be required to provide information and details on the development and its likely impacts, for the purposes of assisting the Town in undertaking Planning Impact Analysis.

Prior to the approval of a Land Use Impact Assessment, Council shall provide adequate time for a public review of the report, using the procedures for public notification as outlined for Discretionary Uses or Variances.

2.6.3 Financial Guarantees by Developer

Council may require a developer, before commencing a development, to make such financial provisions and/or enter into such agreements as may be required to guarantee the payment of service levies, ensure site reinstatement, and to enforce the carrying out of any other condition attached to a permit.

The financial provisions may be made in the form of:

a) a cash deposit from the developer, to be held by Council;
b) a security or guarantee by a bank, or other institution acceptable to Council, for expenditures by the developer;
c) a performance bond provided by an insurance company or a bank, or;
d) an annual contribution to a sinking fund held by Council.

2.6.4 Service Levy

Council may require a developer to pay a service levy where development is made possible or where the density of potential development is increased, or where the value of real property is enhanced by the carrying out of public works either on or off the site of the development (Section 149 (2) *Municipalities Act, 1999*).

A service levy shall not exceed the cost, or estimated cost, including finance charges to Council of constructing or improving the public works referred to above that are necessary for the real property to

be developed in accordance with the standards required by Council and for uses that are permitted on that real property.

A service levy shall be assessed on the real property based on: (a) the amount of real property benefited by the public works related to all the real property so benefited, and (b) the density of development made capable or increased by the public work.

Council may require a service levy to be paid by the owner of the real property; (a) at the time the levy is imposed, (b) at the time development of the real property commences, (c) at the time development of the real property is completed, or (d) at such other time as Council may decide.

2.6.5 Require Land Conveyed for Public Work Purpose

Council may, for a development not involving a subdivision, require a portion of the land to be developed to be conveyed to the Town for a public purpose where public works are required to accommodate the proposed development.

2.6.6 Land for Park/Public Use

A Council may, for a development that is not a subdivision, require that the owner of the land being developed convey to the council or regional authority, for a public purpose, a portion of the land proposed for development.

2.6.7 Land for Park/Public Use in Subdivisions

Council may require the dedication of a percentage of the land area of any subdivision or other development for public use, and such land shall be conveyed to Council in accordance with Section 37 of the *Act*.

2.6.8 Restoration of Land

Council may require the restoration of land after a development or use is discontinued.

2.6.9 Environmental Covenant

Council may require as part of a land development application approval consideration that an environmental (i.e., wildlife habitat, water quality, tree canopy, viewscapes, etc.) and/or archaeology protection legal covenant be placed on the title of the subject property to protect and preserve the environmental area in perpetuity.

2.7 APPEALS

The person to whom a Town's decision applies shall have the right to appeal that decision in accordance with the provisions of Sections 42 to 46 of the Act. The following excerpts are provided from the *Urban and Rural Planning Act, 2000* with respect to Appeals:

"Appeal

42.(1)A person or an association of persons aggrieved of a decision that, under the regulations, may be appealed, may appeal that decision to the appropriate board where the decision is with respect to

(a)an application to undertake a development;

(b)a revocation of an approval or a permit to undertake a development;

(c)the issuance of a stop work order; and

(d) decision permitted under this or another Act to be appealed to the board.

(2)A decision of a council, regional authority or authorized administrator to adopt, approve or proceed with a plan, scheme, development regulations and amendments and revisions of them is final and not subject to an appeal.

(3) An appeal board shall not make a decision that does not comply with a plan, scheme and development regulations that apply to the matter being appealed.

(4) An appeal made under this section shall be filed with the appropriate board not more than 14 days after the person who made the original application appealed from has received the decision being appealed.

(5) An appeal shall be made in writing and shall include

(a)a summary of the decision appealed from;

(b)the grounds for the appeal; and

(c)the required fee.

(6)A board may meet as often as it considers necessary to conduct its work in an expeditious manner.

(7)A person or group of persons affected by the subject of an appeal or their representatives may appear before a board and make representations concerning the matter under appeal.

(8)A board may inform itself of the subject matter of the appeal in the manner it considers necessary to reach a decision.

(9)A board shall consider and determine appeals in accordance with this Act and a plan, scheme and regulations that have been registered under section 24 and having regard to the circumstances and merits of the case.

(10) In determining an appeal, a board may confirm, reverse or vary the decision appealed from and may impose those conditions that the board considers appropriate in the circumstances and may direct the council, regional authority or authorized administrator to carry out its decision or make the necessary order to have its decision implemented.

(11 Notwithstanding subsection (10), where a council, regional authority or authorized administrator may, in its discretion, make a decision, a board shall not make another decision that overrules the discretionary decision.

(12) The decision of a majority of the members of a board present at the hearing of an appeal shall be the decision of the board.

(13)A board shall, in writing notify the appellant and the appropriate council, regional authority or authorized administrator of the decision of the board.

Hearing of evidence

43.(1) Notwithstanding subsection 42(7), where

(a)due to the isolation of an area that is the subject of an appeal, it would be difficult or costly for a board to hear representations from a council, regional authority, authorized administrator or other person; or

(b)the parties to an appeal agree in writing,

a council, regional authority, authorized administrator and other persons who are parties to the appeal may

(c submits written arguments to the board; or

(d)present arguments by teleconference, telephone or other electronic means,

and the board may deliberate and make a determination on the matter based upon those written or other submissions.

(2) Where a board considers it necessary to visit and view a property that is the subject of an appeal, one member of that board or another person whom the board may authorize, may make that visit and, in writing, report to the board on the visit and viewing of the property.

(3) information provided to a board under subsections (1) and (2) shall be considered to have been provided in the same manner as evidence before a board during a hearing of an appeal under section 42.

Fees

44.(1) The minister may establish fees for the making of appeals under this Part.

(2)A fee paid under subsection (1) shall be paid to the board hearing the matter and shall be retained by that board.

(3) Where an appeal made under section 42 is successful, an amount of money equal to the fee paid by the appellant under subsection (1) shall be paid to the appellant by the council, regional authority or authorized administrator that made the appealed decision.

Development may not proceed

45 (1) Where an appeal is made under section 42, the development with respect to the appeal, work related to that development or an order that is under appeal shall not proceed or be carried out, pending a decision of the board.

(2) Where, on appeal, a permit to develop is confirmed or ordered to be issued, a council, regional authority or authorized administrator shall issue the permit as confirmed or ordered.

Appeal to court

46 (1)A decision of a board may be appealed to the court not later than 10 days after that decision has been received by the appellant.

(2) An appeal of a decision of a board under subsection (1) may be made on a question of law or jurisdiction.

(3)A board may be represented by counsel and heard on an appeal under this section.

(4) the court shall either confirm or vacate the order of the board and where vacated the court shall refer the matter back to the board with the opinion of the court as to the error in law or jurisdiction and the board shall deal with the matter in accordance with that opinion."

- End of Excerpt -

The following process consists of excerpts from Ministerial Development Regulations (including the numbering) which can be found in the Appendices.

"Notice of Right to Appeal

5. Where the Authority makes a decision that may be appealed under section 42 of the Act, the Authority shall, in writing, at the time of making that decision, notify the person to whom the decision applies of the:

   a) person's right to appeal the decision to the board;
   b) time by which an appeal is to be made;
   c) right of other interested persons to appeal the decision; and
   d) manner of making an appeal and the address for the filing of the appeal.

Appeal Requirements

6 (1) The secretary of the Appeal Board at the Department of Municipal and Provincial Affairs, Main Floor, Confederation Building (West Block), P.O. Box 8700, St. John's, NL, A1B 4J6 is the secretary to all Appeal Boards in the province and an appeal filed with that secretary within the time period referred to in subsection 42(4) of the Act shall be considered to have been filed with the appropriate Appeal Board.
(2) The fee required under section 44 of the Act shall be paid to the Appeal Board that hears the decision being appealed by filing it with the secretary referred to in subsection (1) or (2) within the 14 days referred to in subsection 42(4) of the Act.
(3) The Appeal Board that hears the decision being appealed shall, subject to subsection 44(3) of the Act, retain the fee paid to the Appeal Board.
(4) Where an appeal of a decision and the required fee is not received by an Appeal Board in accordance with this section and Part VI of the Act, the right to appeal that decision shall be considered to have been forfeited.

Appeal Registration

7. (1) Upon receipt of an appeal and fee as required under the Act and these regulations, the secretary of the Appeal Board as referred to in subsections 24(1) and (2), shall immediately register the appeal.
(2) Where an appeal has been registered the secretary of the Appeal Board shall notify the Authority of the appeal and shall provide to the Authority a copy of the appeal and the documentation related to the appeal.
(3) Where the Authority has been notified of an appeal that Authority shall within one week of notification forward to the appropriate board a copy of the application being appealed, all correspondence, council minutes, plans and other relevant information relating to the appeal including

the names and addresses of the applicant and other interested persons of whom the authority has knowledge.
(4) Upon receipt of the information under subsection (3), the secretary of the board shall publish in a newspaper circulated in the area of the appropriate authority, a notice that the appeal has been registered.
(5) A notice published under subsection (4) shall be published not fewer than 2 weeks before the date upon which the appeal is to be heard by the board.

Development Prohibited

8. (1) Immediately upon notice of the registration of an appeal the Authority shall ensure that any development upon the property that is the subject of the appeal ceases.
(2) Sections 102 and 104 of the Act apply to the Authority acting under subsection (1).
(3) Upon receipt of a notification of the registration of an appeal with respect to an order under section 102 of the Act, the Authority shall not carry out work related to the matter being appealed.

Hearing Notice and Meetings

9. (1) An Appeal Board shall notify the appellant, applicant, authority and other persons affected by the subject of an appeal of the date, time and place for the appeal not fewer than 7 days before the date scheduled for the hearing of the appeal.

(2) An Appeal Board may meet as often as is necessary to conduct its work in an expeditious manner.

Hearing of Evidence

10 (1) An Appeal Board shall meet at a place within the area under its jurisdiction and the appellant and other persons notified under regulation 29(1) or their representative may appear before the Appeal Board and make representations with respect to the matter being appealed.

(2) An Appeal Board shall hear an appeal in accordance with section 43 of the Act and these regulations.

(3) A written report submitted under subsection 43(2) of the Act respecting a visit to and viewing of a property shall be considered to have been provided in the same manner as evidence directly provided at the hearing of the Appeal Board.

(4) In the conduct of an appeal hearing, the Appeal Board is not bound by the rules of evidence.

Board decision

11. A decision of the board must comply with the plan, scheme or development regulations that apply to the matter that has been appealed to that board."

- End of excerpt –

2.8 ENFORCEMENT

2.8.1 Delegation of Authority

The *Urban and Rural Planning Act, 2000* provides for delegation of enforcement responsibilities under section 109, where, an employee of a council may issue an order under the section (see below). An order made by an employee shall be confirmed by a majority vote of the members of the council present at the next meeting of that Council after the order is made and if the order is not confirmed in this manner, it shall be considered to be cancelled.

2.8.2 Right of Entry

Council or an officer may enter upon any public or private land and may at all reasonable times enter any development or building upon the land for the purpose of making surveys or examinations or obtaining information relative to the carrying out of any development, construction, alteration, repair, or any other works whatsoever which Council is empowered to regulate.

2.8.3 Enforcement Authorities

Where it is determined that a use of land or development is contrary to the Integrated Community Sustainability Municipal Plan and Development Regulations, Council may initiate enforcement measures by issuing a stop work order. Every inspector shall keep a record of any violation of these Regulations and report that violation to Council.

2.9 NATIONAL CODES AND REGULATIONS

The National Building Code, and associated codes, such as the Plumbing Code, the Fire Code, the Electrical Code, the Life Safety Code, and any other ancillary code and other municipal regulations regulating or controlling the development, conservation, and use of land shall, under these Regulations apply to the entire Planning Area. Water quantity and quality are to comply with the Canadian Drinking Water Standards.

3.0 LAND USE ZONES

The Municipal Plan states the Intent and Policies for each of the following land use classes. The Development Regulations enable the implementation of these policies through the following zones:

RESIDENTIAL:

1. RESIDENTIAL LOW DENSITY
2. RESIDENTIAL MEDIUM DENSITY
3. RESIDENTIAL RURAL

COMMERCIAL:

4. DOWNTOWN COMMERCIAL
5. HIGHWAY COMMERCIAL
6. NEIGHBOURHOOD COMMERCIAL

INDUSTRIAL:

7. INDUSTRIAL
8. INDUSTRIAL LIGHT
9. INDUSTRIAL RURAL

OTHER ZONES:

10. AGRICULTURAL
11. COMPREHENSIVE DEVELOPMENT AREAS (CDA)
    a. CDA-Comprehensive Development Area – Mixed
    b. CDA- Comprehensive Development Area -Tourism-Related
    c. CDA- Comprehensive Development Area -Industrial
12. CONSERVATION
13. MIXED USE
14. OPEN SPACE/RECREATION
15. PROTECTED WATER SUPPLY
16. PUBLIC USE
17. RESORT
18. RURAL
19. TRANSPORATION/TRANSMISSION CORRIDOR

3.1 RESIDENTIAL ZONES

3.1.1 Residential Low Density -Detached Dwelling Zone

USE ZONE TABLE: RESIDENTIAL LOW DENSITY (RLD) ZONE		
PERMITTED USES	**DISCRETIONARY USES**	**PROHIBITED USES**
-Detached Dwelling (4.7.1) *-Personal Care Home-Residential (4.7.7)* *-Conservation – All Uses categories (4.5))* *-Home Business – home office only (5.4)* *-Uses permitted in all zones (2.3.2.5)*	*-Home business (5.4) other than home office which is listed as permitted* *-Urban agriculture (4.2.2)*	-Mobile homes/mini-homes

Conditions:

1. Subject to all other applicable requirements in Chapters 1, 2, 4, 5, 6, 7, 8, and 9 of the Development Regulations.

2. All development in the RLD zone must have municipal water and sewer servicing.

3. Infill development should be utilized for residential subdivision of 3 (three) lots and less.

4. New RLD subdivisions should be comprised of a mix of residential lot sizes comprising:
   a. a maximum of 60% of large lot residential parcels of 670 m^2;
   b. a maximum of 10% of residential parcels of a minimum parcel size of 465m^2.
5. Site Development Standards for Discretionary Uses:
   a. Must meet standards for Detached Dwelling (as noted above) or Commercial Use (4.2), whichever is greater;
   b. Must comply with buffers/separation distances set out in 4.1.3.

SITE DEVELOPMENT STANDARDS RESIDENTIAL LOW DENSITY/DETACHED DWELLING ZONE			
Minimum			
Standards	**Large Lot***	**Small Lot**	**Infill Detached Dwellings only**
Lot area (m^2)	670	465	375
Floor area (building footprint) (m^2)	110	80	n/a
Frontage (m)	23	15	15.3
Building Line Setback (m)*	7	7	5-7
Side yard Width (m)	3	3	1.5/3
Flanking side yard	7	7	7
Rear yard (m)	9	9	6
Depth (m)	30	30	28
Maximum			
Lot Coverage (%)	40%	40%	40%
Height (m)	10	10	10

* Personal Care Home-Residential is only allowed on a Large Lot.

3.1.2 Residential Medium Density Zone

Housing types may include well-designed town homes, cluster housing consisting of small footprint homes, three and four-unit residential structures and bare strata subdivisions of detached dwellings with private driveways and shared common property (NL *Condominium Act, 2009*). These uses provide more efficient use of municipal infrastructure.

In considering a rezoning of land to Residential Medium Density, Council shall consider appropriate transition in intensity, use and form between existing neighbourhoods, and to ensure compatibility, may require site-specific setbacks, landscaping or different density standards to maintain or enhance neighbourhood character.

USE ZONE TABLE: RESIDENTIAL MEDIUM DENSITY (RMD) ZONE		
PERMITTED USES	**DISCRETIONARY USES**	**PROHIBITED USES**
-Detached Dwelling (4.7.1) *-Semi-Detached Dwelling (4.7.2)* *-Cluster Residential (4.7.9)* *-Home Business – home office only (5.4)* *-Personal Care Home-Residential (4.7.7)* *-Conservation – All Uses categories (4.5)* *-Uses permitted in all zones (2.3.2.5)*	*-Townhomes (4.7.3)* *-Apartments (4.7.5)* *-Home business (5.4) other than home office which is listed as permitted* *-Urban agriculture (4.2.2)*	-Mobile homes/mini-homes

Conditions:

1. Subject to all other applicable requirements in Chapters 1, 2, 4, 5, 6, 7, 8, and 9 of the Development Regulations.

2. All development in the RMD zone must have municipal water and sewer servicing.

3. Infill development should be utilized for residential subdivision of 3 (three) lots and less.

DEVELOPMENT STANDARDS: RESIDENTIAL MEDIUM DENSITY				
Standards:	**Detached Dwelling**	**Semi-Detached Dwelling**	**Townhomes**	**Infill Detached Dwellings only**
Minimum				
Lot area (m^2)	465	790	240*	375
Floor area	80	80*	n/a	n/a
Frontage (m)	15	9*	6/9 for end units	15.3
Building Line	7	7	7	5-7**
Side yard Width	3	3	5	1.5/3
Side yard, Flanking	7	7	15	7
Rear yard (m)	9	9	12	6
Maximum				
Lot Coverage (%)	40%	40%	40%	40%
Height (m)	10	10	10	10

*PER UNIT
**Note that a staggered setback is permitted to provide for a more visually interesting streetscape.

DEVELOPMENT STANDARDS: CLUSTER RESIDENTIAL COMPREHENSIVE DEVELOPMENT						
	Type I		**Type II**		**Type III**	**Type IV**
Standards	A: Detached Dwelling (standard size)	B: Detached Dwelling (compact size)	Detached Dwelling	Semi-Detached	Town-houses	
Minimum						
Lot size (m^2)	700	372	372	745	2000	A combination of Types I, II and III and associated standards in this table will apply
Front (m)	18	9	9	30	30	
Building Line Setback (m)	7.5	7.5	7.5	7.5	7.5	
Side Yards (m)	1.8	1.8	1.8	1.8	7.5	
Flanking Yard	3.6	3.6	3.6	3.6	7.5	
Rear Yard (m)	7.5	7.5	7.5	7.5	8	
Depth (m)	30	30	30	30	30	
% Open Space of total Cluster Comprehensive Development	50	60	70		80	50% to 80% The amount of open space shall be calculated in proportion to the housing types
Maximum						
Lot Coverage %	40%	40%	40%	40%	40%	
Maximum	11	11	11	11	11	

3.1.3 Residential Rural

This zone is intended for areas suitable for residential development but cannot be economically provided with municipal services.

USE ZONE TABLE: RESIDENTIAL RURAL	
PERMITTED USES	**DISCRETIONARY USES**
- Detached Dwelling (4.7.1) *- Personal Care Home-Residential Care (4.7.7)* *-Conservation – All Uses categories (4.5)* *-Home Business – home office only (5.4)* *-Uses permitted in all zones (2.3.2.5)* *-Urban agriculture (4.2.2)*	*-Home business (5.4) other than home office which is listed as permitted* *-Public Gathering Places-Indoor (4.6.4)*

SITE DEVELOPMENT STANDARDS: RESIDENTIAL RURAL		
	Detached Dwelling	
	No services	**One service: water**
Minimum		
Lot area (m^2)	4047**	3000
Frontage (m) *	30	30
Building Line Setback (m)	8	8
Side yard Width (m)	5	5
Side yard, Flanking (m)	15	15
Rear yard Depth* (m)	15	15
Maximum		
Height)	8	8
Lot Coverage %	30	30

***Note:** where a residential development abuts a waterway reservation and the property cannot be otherwise developed although it meets the frontage and lot area requirements of this zone, the minimum rear yard shall be 9 metres measured from the rear property line or reservation, whichever is greater.

**The minimum parcel size for new Rural Residential zoned properties shall be 4,047 m^2, and as further determined by Services NL for an approved septic disposal system and an approved domestic source of well water

Conditions:

1. Subject to all other applicable requirements in Chapters 1, 2, 4, 5, 6, 7, 8, and 9 of the Development Regulations.
2. Must meet Well and Septic standards as set out by Service NL.

Additional Site Development Standards for Discretionary Uses:

1. Must meet standards for Detached Dwelling (as noted above) or Commercial Use (4.2), whichever is greater;
2. Must comply with buffers/separation distances set out in 4.1.3.

3.2 COMMERCIAL ZONES

3.2.1 Downtown Commercial Zone

Future development in the Main Street area is intended to create a more street front-oriented downtown commercial core. To create this downtown atmosphere with a friendlier shopping experience, customer parking should be placed at the rear of the buildings and commercial buildings should be placed closer to the street. As well, allowing greater building coverage on the lot allows for a business to be located in closer proximity, again fostering walkability and enhancing a downtown streetscape.

USE ZONE TABLE DOWNTOWN COMMERCIAL ZONE	
PERMITTED USES	**DISCRETIONARY USES**
- Commercial Land Use Class (4.3): All Uses, ***EXCEPT*** *Amusement Park/Attraction, Campgrounds, Resort* *-Institutional (4.6) EXCEPT Cemetery and Protective and Emergency Services* *-Uses permitted in all zones (2.3.2.5)*	*-Apartment building (4.7.5) with commercial on main floor* *-Townhouse (4.7.3)* *-Public Gathering – Indoor (4.6.4)* *-Light industrial (4.4.10)* *-Personal Care Home-Residential (4.7.7)*

Conditions:

1. Subject to all other applicable requirements in Chapters 1, 2, 4, 5, 6, 7, 8, and 9 of the Development Regulations.
2. All commercial developments shall be fully serviced with municipal sanitary sewer service, municipal water and indicate provisions for storm water.
3. All commercial development sites shall surface the parking areas, and egress and access locations, with a paved or otherwise durable surface such as concrete. Paving shall be completed prior to issuance of final occupancy permit.
4. All commercial developments shall also be referred to Services NL for fire/ life safety and building accessibility review prior to the commencement of construction.

DOWNTOWN COMMERCIAL DEVELOPMENT STANDARDS	
Minimum Standards:	
Front yard (building line) (m)*	4
	Notwithstanding the standards in the Use Zone Table, Council may require the front yard setbacks (building line) of new building to complement the setbacks of existing conforming buildings on adjoining or nearby lots on the same street and may allow buildings be permitted to abut exiting sidewalks.
Side yard (m):	3 - 5 at the discretion of Council
Side yard for open storage (m):	5
Flanking yard (m):	4
Rear yard (m):	10-15
Lot coverage	30%
Maximum Standards	
Height (m)	15
Lot coverage	50% - 70% subject to Council discretion

3.2.2 Highway Commercial Zone

This zone is intended for businesses that cater to the travelling public and offer a centralized combination of services to meet their needs.

USE ZONE TABLE HIGHWAY COMMERCIAL ZONE	
PERMITTED USES	**DISCRETIONARY USES**
-Amusement Park/attraction (4.3.1) *-Campground (4.3.9)* *-Convenience Store (4.3.13)* *-Hotel or Inn (4.3.17)* *-Marina (4.3.18)* *-Motel (4.3.20)* *-Outdoor Market (4.3.22)* *-Restaurants (4.3.26)* *-Service Station (4.3.29)* *-Uses permitted in all zones (2.3.2.5)*	*-Public Gathering – Indoor (4.6.4)* *- Personal Care Home-Residential (4.7.7)*

Conditions:

1. Subject to all other applicable requirements in Chapters 1, 2, 4, 5, 6, 7, 8, and 9 of the Development Regulations.
2. All commercial developments shall be fully serviced with municipal sanitary sewer service, municipal water and provision for storm water.
3. All commercial development sites shall surface the parking areas, and egress and access locations, with a paved or otherwise durable surface such as concrete. Paving shall be completed prior to issuance of final occupancy permit.
4. All commercial developments shall also be referred to Services NL for fire/ life safety and building accessibility review prior to the commencement of construction.
5. All commercial development in the Highway Commercial zone are required to submit a Comprehensive Development application.

HIGHWAY COMMERCIAL USE DEVELOPMENT STANDARDS	
Minimum Standards	
Front yard (building line) (m)*	10
	Notwithstanding the standards in the Use Zone Table, Council may require the front yard setbacks (building line) of new building to complement the setbacks of existing conforming buildings on adjoining or nearby lots on the same street and may allow buildings be permitted to abut exiting sidewalks.
Side yard (m):	2 - 5 at the discretion of Council
Side yard for open storage (m):	5
Flanking yard (m):	6-8
Rear yard (m):	10
Maximum Standards	
Height (m)	10

3.2.3 Neighbourhood Commercial Zone

These commercial operations are intended to service the immediate neighbourhoods, as compared to having a more regional catchment area. They must integrate visually with the surrounding residential neighbourhood and enhance the sense of community, not distract from it.

USE ZONE TABLE NEIGHBOURHOOD COMMERCIAL ZONE	
PERMITTED USES	**DISCRETIONARY USES**
-Convenience Store (4.3.13) *-General Service/repair (4.3.16)* *-Retail (4.3.27)* *-Personal service (4.2.23)* *-Uses permitted in all zones (2.3.2.5)*	Public Gathering Place-Indoor (4.6.4)

Conditions:

1. Subject to all other applicable requirements in Chapters 1, 2, 4, 5, 6, 7, 8, and 9 of the Development Regulations.

2. All commercial developments shall be fully serviced with municipal sanitary sewer service, municipal water and provision for storm water.

3. All commercial development sites shall surface the parking areas, and egress and access locations, with a paved or otherwise durable surface such as concrete. Paving shall be completed prior to issuance of final occupancy permit.

4. All commercial developments shall also be referred to Services NL for fire/ life safety and building accessibility review prior to the commencement of construction.

NEIGHBOURHOOD COMMERCIAL USE DEVELOPMENT STANDARDS	
Minimum Standards	
Front yard (building line) (m)*	6
	Notwithstanding the standards in the Use Zone Table, Council may require the front yard setbacks (building line) of new building to complement the setbacks of existing conforming buildings on adjoining or nearby lots on the same street and may allow buildings be permitted to abut exiting sidewalks.
Side yard (m):	2 - 5 at the discretion of Council
Side yard for open storage (m)	5
Flanking yard (m):	4
Rear yard (m):	10
Maximum Standards	
Height (m)	15

3.3 INDUSTRIAL ZONE

3.3.1 Industrial Zone

USE ZONE TABLE INDUSTRIAL	
PERMITTED USES	**DISCRETIONARY USES**
-Industrial – General (4.4.8) *-Industrial – Light (4.4.10)* *-Industrial – Mall (4.4.11)* *-Contractor – General (4.4.4)* *-Composting Facility (4.4.3)* *-Protective and Emergency Services (4.6.3)* *-Custom Manufacturing Service (4.3.14)* *-Solid Waste Recycling/Disposal/Composting Site (4.4.17)* *-Autobody shop (4.3.3)* *-Automotive repair shop (4.3.5)* *-Uses permitted in all zones (2.3.2.5)*	

Conditions:

1. Subject to all other applicable requirements in Chapters 1, 2, 4, 5, 6, 7, 8, and 9 of the Development Regulations.

2. Minimum property size for subdivision of a serviced site in this zone is 0.4 hectare;

INDUSTRIAL DEVELOPMENT STANDARDS	
Minimum Standards	
Front yard (building line) (m)	6
Side yard. (m)	5
Flanking yard (m)	5
Rear yard (m)	10
Site coverage (%)	30
Maximum Standards	
Height (m)	15

3.3.2 Industrial Light Zone

USE ZONE TABLE INDUSTRIAL LIGHT ZONE	
PERMITTED USES	**DISCRETIONARY USES**
-Industrial – Light (4.4.10) *-Industrial – Mall (4.4.11)* *-Custom Manufacturing Service (4.3.14)* *-Protective and Emergency Services (4.6.3)* *-Uses permitted in all zones (2.3.2.5)*	*-Solid Waste Recycling/ Disposal/Composting Site (4.4.17)*

Conditions:

1. Subject to all other applicable requirements in Chapters 1, 2, 4, 5, 6, 7, 8, and 9 of the Development Regulations.

2. Minimum property size for subdivision of a serviced site in this zone is 0.4 hectare;

3. Outdoor storage for new industrial sites in the Church Street business park area shall be encouraged not to exceed 15% of the floor area of their principal industrial building; outside storage is intended to be only permitted upon review and approval by Council of a professionally prepared landscape design plan for the property in order to screen and obstruct the storage use from public view (as a condition of the business licence).

DEVELOPMENT STANDARDS- INDUSTRIAL LIGHT USE	
Minimum Standards	
Front yard (building line) (m)	6
Side yard. (m)	4
Flanking yard (m)	5
Rear yard (m)	10
Site coverage (%)	30
Maximum Standards	
Height (m)	15

3.3.3 Industrial Rural Zone

USE ZONE TABLE INDUSTRIAL RURAL ZONE	
PERMITTED USES	**DISCRETIONARY USES**
-Industrial – General (4.4.8) *-Industrial – Heavy and Hazardous ((4.4.9)* *-Contractor – General (4.4.4)* *-Composting Facility (4.4.3)* *-Natural Resource-Related Industries (4.4.15)* *-Protective and Emergency Services (4.6.3)* *-Veterinary Clinic (4.3.30)* *-Uses permitted in all zones (2.3.2.5)*	*-Energy Generation Facilities (4.4.5)* *-Salvage/scrap yard (4.4.16)*

Conditions:

1. Subject to all other applicable requirements in Chapters 1, 2, 4, 5, 6, 7, 8, and 9 of the Development Regulations.

2. Non-serviced industrial development is permitted in the Industrial Rural zone.

INDUSTRIAL USE CLASS DEVELOPMENT STANDARDS	
Minimum Standards	
Front yard (building line) (m)	10
Side yard. (m)	5
Flanking yard (m)	8
Rear yard (m)	15
Maximum Standards	
Height (m)	15

3.4 AGRICULTURAL ZONE

USE ZONE TABLE AGRICULTURAL ZONE	
PERMITTED USES	**DISCRETIONARY USES**
- Commercial Agriculture (4.2.1) *-Uses permitted in all zones (2.3.2.5)*	*-Natural resource related uses (4.4.15) – directly related to agriculture <u>only</u>* *-Energy Generation Facilities (4.4.5)* *-Light industrial – micro-distillery <u>only</u> (4.4.10)*

Conditions:

1. Subject to all other applicable requirements in Chapters 1, 2, 4, 5, 6, 7, 8, and 9 of the Development Regulations.
2. Applications for rezoning of Agriculture zone must contain a soil assessment prepared by a professional (accredited) soil specialist for review by Council.

3.5 COMPREHENSIVE DEVELOPMENT AREA (CDA) ZONES

3.5.1 CDA – General Conditions

No new development can take place in a Comprehensive Development Area (CDA) until comprehensive planning has been carried out as specified in the Municipal Plan.

Council may consider applications for a Comprehensive development (refer to section 2) which must be prepared by a Member of the Canadian Institute of Planners and they may include the following:

- identification of environmentally sensitive lands,
- proposed land uses including attention to efficient use of the land base,
- proposed road network and sewer/water and stormwater servicing, how the roads will add to connectivity of the existing road system,
- a tree retention/replacement and landscaping plan must be included as a component of the CDA. Street tree plantings at the frontage of new developments should be spaced of 9.0 m.
- parks and open space provisions for build-out of the neighbourhood plan area including proposals for developing connective pedestrian trail linkages to a community wide pedestrian mobility system, and,
- other community planning issues, as determined by Council.

If endorsed by Council, or approved in principle with varied revisions, the CDA proponent is make application to the Town to amend the CDA designation and for rezoning of the subject lands to their proposed zoning.

3.5.2 Comprehensive Development Area – Mixed (CDA-M)

USE ZONE TABLE Comprehensive Development Area – Mixed (CDA-M)	
PERMITTED USES	**DISCRETIONARY USES**
-Non-conforming uses (2.4.3) *-Uses permitted in all zones (2.3.2.5)*	

Conditions:

1. Utility services in new subdivisions shall be rear only and buried to the home or completely buried. No utilities should be in front of the home except for street lighting.
2. Council shall require the installation of municipal water and sewer at the developer's expense; and a tree retention/replacement and landscaping plan must be included as a component of the CDA. Street tree plantings at the frontage of new developments should be spaced of 9.0 m.
3. The zones that may be applied within this CDA-M include: Mixed zone (3.7), Residential zones: RLD (3.1.1), RMD (3.1.2); and Commercial zones: DC (3.2.1), and NC (3.2.3).

3.5.3 Comprehensive Development Area-Tourism-Related (CDA-T)

USE ZONE TABLE Comprehensive Development Area-Tourism-Related (CDA-T)	
PERMITTED USES	**DISCRETIONARY USES**
-Non-conforming uses (2.4.3) *-Uses permitted in all zones (2.3.2.5)*	

Conditions:

1. Council shall require the installation of water and sewer at the developer's expense which could include individual or collective wells and septic disposal and treatment systems developed in accordance with provincial regulations administered by Service NL and federal guidelines (Canadian Drinking Water Standards) and with the approval of the Town.
2. The zones to be used in the CDA-T include: Resort zone (3.11) and Highway Commercial zone (3.2.2.)

3.5.4 Comprehensive Development Area-Industrial (CDA-I)

USE ZONE TABLE Comprehensive Development Area-Industrial (CDA-I)	
PERMITTED USES	**DISCRETIONARY USES**
-Non-conforming uses (2.4.3) *-Uses permitted in all zones (2.3.2.5)*	

Conditions:

1. Council shall require the installation of municipal water and sewer at the developer's expense; no on-site servicing of lots will be allowed at this site;
2. The uses to be applied in the CDA-I include those from the Industrial Light zone (3.3.2).

3.6 CONSERVATION ZONE

USE ZONE TABLE CONSERVATION ZONE	
PERMITTED USES	**DISCRETIONARY USES** *(see Condition 3)*
-Conservation – All uses (4.5) *-Uses permitted in all zones (2.3.2.5)*	*-Campgrounds (4.3.9)* *-Marina (4.3.18)* *-Restaurant (4.3.26)* *-Outdoor Market (4.3.22)* *-Tourism uses*

DEVELOPMENT STANDARDS FOR STRUCTURES IN CONSERVATION ZONE	
Minimum Standards in Metres (m)	
Front yard (building line)	10
Side yard	5
Flanking yard	8
Rear yard	15
Maximum Standards	
Height (m)	15

Conditions:

1. Subject to all other applicable requirements in Chapters 1, 2, 4, 5, 6, 7, 8, and 9 of the Development Regulations.
2. Notwithstanding the standards in the Use Zone Table, Council may require the yard setbacks of new building to complement the yard setbacks of existing conforming buildings on adjoining or nearby lots on the same street.
3. As per the Policy for Flood Plain Management which applies to the Conservation areas within the 1:20-year and 1:100-year flood zone overlay areas shown on the Land Use zoning map, the Discretionary Uses allowed are subject to conditions set out in the policy:

   https://www.mae.gov.nl.ca/waterres/regulations/policies/flood_plain.html

4. Note that the buffer along Blue Gulch Transmission and South Brooks are 20 m from the top of the bank on each side of the watercourse to provide for enhanced flood risk protection and trails.

3.7 MIXED USE ZONE

USE ZONE TABLE MIXED USE ZONE	
PERMITTED USES	**DISCRETIONARY USES**
-Semi-detached Dwelling (4.7.2) *-Apartment building (4.7.5) see Condition 4* *-Business support service (4.3.8)* *-Club and Lodge (4.3.11)* *-Convenience store (4.3.13)* *-General Service/repair (4.3.16)* *-Medical or Dental Clinic (4.3.19)* *-Personal Service (4.3.23)* *-Offices (4.3.24)* *-Restaurant – full service (4.3.26.2)* *-Retail (4.3.27)* *-Public Gathering Place – Indoor (4.6.4)* *-Uses permitted in all zones (2.3.2.5)*	*-Bar (4.3.6)* *-Institutional (4.6.2)* ***EXCEPT*** *Public Gathering Places-Outdoor (4.6.5)* *-Personal Care Facilities Non-Residential (4.6.2.1)* *-Detached Dwelling – (4.7.1)* *-Home business (5.4)*

SITE DEVELOPMENT STANDARDS MIXED USE ZONE		
Standards: (minimum)	**Commercial building**	**Mixed Use Building**
Lot area (m^2)	929	929
Frontage (m) *	21	30
Building Line Setback (m)	To be determined at the discretion of Council	
Side yard Width (m)	5	5
Rear yard (m)	10	15
Height (m)	15	15
Maximum		
Lot Coverage (%)	60	25

Conditions:

1. Subject to all other applicable requirements in Chapters 1, 2, 4, 5, 6, 7, 8, and 9 of the Development Regulations.
2. For both vertical and horizontal mixed-use development: Require sufficient sound-proofing measures between non-residential and residential uses whether located side-by-side or vertically within the same building (Mixed use building);
3. Apartment buildings: Stand-alone apartment buildings must conform to the site requirements of the Residential High-Density Zone;
4. Mixed Use Building shall have:
   - non-residential use limited to the first floor/street-level only in a mixed building;
   - Allow a maximum of 8 (eight) dwelling units with a minimum floor area of 70 m^2 per unit;
   - There must be a separate entrance for the non-residential use and the residential use from the main floor;
   - Parking standards are a blend of commercial and residential requirements;

3.8 OPEN SPACE/RECREATION ZONE

USE ZONE TABLE OPEN SPACE/RECREATION ZONE	
PERMITTED USES	**DISCRETIONARY USES**
-Public Gathering Places – Outdoor (4.6.5) *-Open space, parks and Trails (4.5.2)* *-Environmental Protection area (4.5.1)* *-Sport and recreation facilities (4.6.6)* *-Uses permitted in all zones (2.3.2.5)*	*-Campgrounds (4.3.9)* *-Marina (4.3.18)* *-Restaurant – (4.3.26)* *-Outdoor Market (4.3.22)*

DEVELOPMENT STANDARDS FOR STRUCTURES IN OPEN SPACE/RECREATION ZONE	
Minimum Standards in Metres (m):	
Front yard (building line)	10
Side yard	5
Flanking yard	8
Rear yard	15
Maximum Standards	
Height (m)	15

Conditions:

1. Subject to all other applicable requirements in Chapters 1, 2, 4, 5, 6, 7, 8, and 9 of the Development Regulations.

3.9 PROTECTED WATER SUPPLY ZONE

USE ZONE TABLE: PROTECTED WATER SUPPLY	
PERMITTED USE CLASSES- *Uses permitted by the Water Resources Management Division (Refer to Condition 1)*	**DISCRETIONARY USE CLASSES**
-Environmental Protection Area (4.5.1) *-Cottage/seasonal residential (4.7.7)* *-Forestry (4.4.7)* *-Natural Resource Use (4.4.14)* *-Commercial Agriculture (4.2.1)* *-Conservation (4.5)* *-Uses permitted in all zones (2.3.2.5)*	

Conditions:

1. No development is allowed without Water Resources approval. In review of proposals for development or work adjacent to or within the Protected Public Water Supply Area, the proponent must comply with the requirements of the NL Water Resources Management Division and obtain a permit under Section 39 of the *Water Resources Act, 2002*. Refer to the provincial policy:

   https://www.mae.gov.nl.ca/waterres/regulations/policies/water_related.html

2. The following buffers apply regarding development within a Protected Water Supply Area:

Watercourse (Body of water)	Buffer - Minimum width
• Intake pond or lake	150 metres
• Intake river	150 metres for 1 kilometre upstream and 100 metres downstream of a water supply intake
• Main river channel	75 metres
• Major tributaries, lakes or ponds	50 metres
• Other watercourses	30 metres

3. Subject to all other applicable requirements in Chapters 1, 2, 4, 5, 6, 7, 8, and 9 of the Development Regulations.

3.10 PUBLIC USE ZONE

USE ZONE TABLE PUBLIC USE	
PERMITTED USES	**DISCRETIONARY USES**
-Institutional/Public Uses – All (4.6) EXCEPT Crematoria *-Uses permitted in all zones (2.3.2.5)*	*-Club and lodge (4.3.11)* *-Outdoor Market (4.3.22)* *-Marina (4.3.18)* *- Crematoria associated with a funeral home*

PUBLIC USE DEVELOPMENT STANDARDS	
Minimum Standards in Metres (m):	
Front yard (building line)	8-10
Side yard	5
Flanking yard	8
Rear yard	8-15
Maximum Standards	
Height (m)	15
Coverage (%)	40%

Conditions:

1. Subject to all other applicable requirements in Chapters 1, 2, 4, 5, 6, 7, 8, and 9 of the Development Regulations.
2. All public uses have adequate vehicular and pedestrian access to the site and provide for safe and efficient traffic and pedestrian flow.

3.11 RESORT ZONE

USE ZONE TABLE RESORT	
PERMITTED USES	**DISCRETIONARY USES**
-Resort (4.2.25) *-Campground (4.3.9)* *-Uses permitted in all zones (2.3.2.5)*	*-Club and lodge (4.3.11)* *-Outdoor Market (4.3.22)*

Conditions:

Subject to all other applicable requirements in Chapters 1, 2, 4, 5, 6, 7, 8, and 9 of the Development Regulations.

RESORT DEVELOPMENT STANDARDS	
Minimum Standards in Metres (m):	
Front yard (building line)	8-10
Side yard	5
Flanking yard	8
Rear yard	8-15
Maximum Standards	
Height (m)	15

3.12 RURAL ZONE

USE ZONE TABLE RURAL ZONE	
PERMITTED USES	**DISCRETIONARY USES**
-Conservation – All uses (4.5) *-Public Gathering Places-Outdoor (4.6.5)-see condition 2;* *-Campgrounds (4.3.9)* *-Commercial Agriculture (4.2.1)* *-Residential: (1) Detached dwelling only in association with a primary use (4.7.2); and Condition 4)* *-Cemetery (4.6.1)* *-Uses permitted in all zones (2.3.2.5)*	*-Forestry Activities (4.4.7) subject to Condition 3 below regarding viewscapes* *-Mineral Working (4.4.12)* *-Petroleum exploration (4.4.18)* *-Industrial-Light (4.4.10)* *-Energy Generating facilities (4.4.5)*

Conditions:

1. Subject to all other applicable requirements in Chapters 1, 2, 4, 5, 6, 7, 8, and 9 of the Development Regulations.

2. Development should be related to Tourism uses.
3. No forestry activities that will affect the Town viewscape, such as clearcutting the top of the hills in the back of Pasadena that is visible from throughout the Town, will be permitted without approval of Council.

4. PYNN'S BROOK LOCAL SERVICE DISTRICT

a. Notwithstanding the restriction on detached dwelling units in association with permitted Rural uses, within the Pynn's Brook Local Service District residential infill development will be allowed on existing public roads subject to the standards of the Rural Residential zone;

b. New residential development will be allowed to have onsite well and sewer service subject to the provincial requirements and approvals from Service NL;

c. No new access roads will be permitted on to the Trans-Canada Highway.

d. Existing homes will be allowed to remain as existing non-conforming uses and the provisions of subsection 7.3.1.8 will apply.

3.13 TRANSPORTATION/TRANSMISSION CORRIDOR ZONE

USE ZONE TABLE TRANSPORATION/TRANSMISSION ZONE	
PERMITTED USES	**DISCRETIONARY USES**
-Public Infrastructure and Utilities (4.8) *-Uses permitted in all zones (2.3.2.5)*	

Conditions:

1. Subject to all other applicable requirements in Chapters 1, 2, 4, 5, 6, 7, 8, and 9 of the Development Regulations.

2. Note that the Trans-Canada Highway is a Protected Road under the Protected Road Zoning Regulations. Refer to Section 4.1.7.

3.14 GROWTH MANAGEMENT BOUNDARY

The Growth Management Boundary identifies the urban development area within which all future residential growth and development is to occur with full water, sewer and stormwater services over the 10-year period for this municipal plan, except for areas specifically identified as Residential Rural zone or unless otherwise stipulated in the zone conditions or where economically unfeasible at the determination of Council.

All future development requiring municipal services to be provided by the Town shall occur the Growth Management Boundary overlay on the Land Use Zoning map.

No new residential development that entails the extension of urban roads and services should be permitted beyond the Boundary unless the development proponent applies and pays for a ICSMP amendment application to the Town to extend the boundary, substantiates the sustainable land use benefit to adjust the Boundary, and receives Council's approval for the Growth Management Boundary extension.

A Planning Impact Analysis (subsection 2.6.2) will be required for any application to amend the Growth Management Boundary. Any amendment application to the Town proposing to adjust and extend the Growth Management Boundary will be encouraged to provide land use planning rationale for the boundary adjustment, to detail how the proposed new development will make efficient use of the land base, to identify the proposed housing mix of the development, and to outline the tree retention measures and open space pedestrian trail benefits that the development will provide to the community.

Within the serviced urban residential area, mobile residential homes and similar mini-types of homes shall not be permitted as a residential dwelling unit.

Where stormwater service is not available, the development shall be required to provide to Council a stormwater management plan for the site.

In non-serviced areas, proposed developments are to receive provincial (Service NL) approvals for on-site sewage deposal, an on-site domestic water supply of sufficient quantity and quality, and for stormwater management.

Municipal services may be provided for any development outside the Growth Management Boundary at the discretion of Council.

4.0 LAND USE AND DEVELOPMENT DEFINITIONS AND STANDARDS

4.1 GENERAL STANDARDS APPLICABLE TO ALL DEVELOPMENT

4.1.1 Access

Definition: means a way used or intended to be used by vehicles, pedestrians or animals in order to go from a street to adjacent or nearby land or to go from that land to the street (*definition from the Minister's Development Regulations).*

Development Standards

1. All development shall be located with frontage on a publicly maintained road.
2. An access on a municipal road shall be located as specified by the Council.
3. All access on a provincial highway is determined by the Department of Transportation and Works (Note: access permits are administered by Service NL).
4. No vehicular access shall be closer than 10 metres to the street line of a street intersection of a local road, or 20 metres to the street line of a street intersection in the case of a collector or arterial road.
5. The Council may require the provision of service streets to reduce the number of individual accesses to an adjacent street.
6. Existing private roads or those public roads not maintained by the Town must be upgraded to municipal standards before the Town will consider taking responsibility for them and before any further development is allowed.
7. Notwithstanding subsection 1, the following types of development may be allowed on lots that have frontage onto a private road only if they are part of a Comprehensive development (that is, arrangements are made for the maintenance of the road, but that the road is not maintained by a Council at public expense):
   - commercial rental cottages;
   - seasonal commercial uses related to tourism;
   - resort developments;
   - seasonal cottage developments not intended for permanent residential use; and,
   - vacant land condominium subdivisions.

4.1.2 Archaeological Sites

If an archaeological site or artefact is discovered during development of a property, the development shall stop and Council will consult with the Provincial Archaeology Office of the Department of Tourism, Culture and Recreation. Development shall not proceed until the Provincial Archaeology Office has evaluated the site or authorized the development to proceed.

Before approval is granted for a major development such as a subdivision or a new commercial or public building, or if the development is located near Deer Lake shoreline, the application will be referred to the Provincial Archaeology Office for comments

4.1.3 Buffers/Separation Distances Between Land Uses:

Definition: Buffer means a berm, wall or opaque fence, row of trees or shrubs, hedge, fence, or distance separation that provides a barrier between incompatible sites, uses or districts intended to obstruct or reduce the noise, lighting glare, unsightly views or any other nuisance of one land use or property onto another.

Standards:

1. The Council may require landscaping and screening buffers as a condition to a permit for a proposed development in order to provide:
    a. an acoustic barrier;
    b. an attractive visual continuity and appearance between developments or on an individual site;
    c. delineation of an area; and
    d. protection for the natural environment.

    Typical buffer/separation distances include:
    a. a screen or separation between different or incompatible uses, principally between residential and non-residential uses, which will consist of either a screen of a minimum height of 1.8 metres, or a buffer of 10 metres between residential and industrial, and 3 metres between residential and commercial;
    b. where an industrial, commercial or civic development permitted in any Use Zone abuts a street that is used as an access into a residential area or zone, a structural barrier or fence may be required in the flanking street side yard by Council and the structure or barrier shall be maintained by the owner or occupier of the property to the satisfaction of Council.;
    c. Non-residential developments proposed adjacent/near established residential areas shall be located in such a manner as to minimize potential impacts of traffic, noise, lighting(glare), site aesthetics and signage; to mitigate such impacts screening, landscaping and separation distance may be added as conditions.
    d. Referral directive for a 1.6 km buffer around the North Harbour Road former waste site required proposed development within this buffer to be referred to the Waste Management Division of the provincial government.

2. Separation Buffers

Separation Between Non-Residential Uses and Residential Uses		
Non-residential uses:	**Buffer (m)**	**Mandatory (M) or Recommended (R)**
Agriculture – farm operation for livestock	600	**M**
Amusement establishment	45	R
Auto repair, body repair, car wash	20	R
Bar, club, lodge,	100	R
Cottage	-	At discretion of Council
Industrial – general and hazardous	100	R
Industrial – light	10	R
Kennel - > 4 dog runs	215	R
Kennel – four or fewer dog runs	100	R

Mineral working	300	**M**
Public institutional	3	R
Restaurant – drive through	10	R
Salvage/scrap yard	200	**M**
Solid waste recycling/disposal &composting sites	300	R

Separation Between Non-Residential Uses		
Uses	**Separation distance in metres**	**Mandatory (M)or Recommended (R)**
Agriculture farm operation	45 from Centerline of Street	M
Cottage	30 m from Watercourse	M
Mineral working	150 m from proposed development	M
	90 m from Designated Protected Road	M
	50 m from Local public roads	M
	50 m Commercial, public &institutional uses	M
Salvage/scrap yard	100 m from Existing/future commercial areas	M
	25 m Public highway or street	M
	50 m from Watercourse/water body	M
Solid waste recycling/disposal and composting sites	150 m from Potential development areas	R
	50 m from Watercourse/ water body	M
	90 m Class I and II Protected Roads	M
	50 m from Class III and IV Protected Roads & local roads	M

4.1.4 Comprehensive Development

Definition: Comprehensive Development means an integrated development on a suitable, large site that responds to a unique market opportunity and involves special development standards not otherwise permitted in the zone. The most common example of a comprehensive development is a vacant land condominium/bare strata development consisting of a contiguous area to be planned, developed, operated, and maintained as a single entity and containing one or more structures with common areas that belong to them, such as a box store complex, resort, multi-unit residential, shopping mall.

Conditions:

1. Required to submit a Comprehensive Development application (2.2.2 & 2.2.4)

2. A comprehensive development application must have frontage on a public road and comply with use requirements of the Zone within which it is located. Notwithstanding the requirement for serviced development, if municipal services are not feasible to the standard required by the Town, the provision of on-site services must meet requirement of provincial agencies, in particular, Water Resource Management Division and Service NL;
3. Roads and services provided in a comprehensive development application whether they are publicly or privately owned, may be treated as if they were public roads, public services and public utilities for the purpose of approvals by the Authority and other agencies.
4. A comprehensive development application may be approved by Council in any zone as a development and/or subdivision on public or private services, subject to the following requirements:
5. the development and/or subdivision shall comply with the requirements of the Integrated Community Sustainability Municipal Plan or any scheme adopted under it, and with the zoning for the site as it pertains to land use, height, and have a suitable relationship to nearby land uses in respect to appearance, traffic requirements, and demands on municipal services; and,
6. a Development Agreement having a Comprehensive Development application attached thereto, satisfactory to Council, between the owners of the land and the Town shall be registered in the Registry of Deeds of Newfoundland and Labrador, controlling the use and development of such land.

4.1.5 Crown Land

Definition: Crown land has the meaning as set out in the *Lands Act, 1991*.

Conditions:

1. The use of Crown land is subject to the Town of Pasadena Integrated Community Sustainability Municipal Plan and Development Regulations, including zoning and permitting requirements.
2. Approvals must be obtained from the appropriate Regional Lands Office, Government of Newfoundland and Labrador; applications are made to the Regional Lands Office.
3. Crown land applications must be approved by the Council regarding the use and development of the land prior to approval for issuance of title by the Lands Branch of the Government of Newfoundland and Labrador.

4.1.6 Federal and Provincial Government Requirements

Wherever possible, the requirements of the federal and provincial agencies have been incorporated into the development standards; however, given that these change over time and other exigencies, applicants are responsible to ensure that all appropriate federal and provincial permits and approvals have been secured prior to the use and/or development of land within the planning area boundary.

4.1.7 Protected Roads

Definition: Protected Roads are provincial highways designated as 'Protected Road's in the *Protected Road Zoning Regulations, 1996* under the *Urban and Rural Planning Act, 2000.* They can be viewed on a map (click on 'zoning for all highways') found at the Department of Municipal Affairs and Environment website.

Conditions:

1. A Development Permit is required from Service NL for development occurring along a Protected Road within the Planning Area boundary as follows:
    - 150 m from the centreline of the provincial highway on either side - from the Planning Area to the Municipal Area boundary; and,
    - 100 m from the centreline of the provincial highway within the Municipal Area boundary.
2. The Municipal Plan and Development Regulation land use policies, designations, zoning and development regulations apply along Protected Roads within the Planning Area boundary.

4.1.8 Nuisance

No building or land shall be used for any purpose which may be dangerous by causing or promoting fires or other hazards or which may emit noxious, offensive or dangerous fumes, smoke, gases, radiation, smells, ash, dust or grit, excessive noise or vibration, or create any nuisance that has an unpleasant effect on the senses unless its use is authorized by Council and any other authority having jurisdiction.

4.1.9 Soil Removal, Soil Deposit and Site Grading and Steep slopes

1. No development permit for removal or deposit of soil, or the excavation and removal of excavated material or grading is required *if it is part* of an approved development project or affects less than 125 m^3 of soil, sand, gravel, rock or other substance down to and including bedrock. All other cut or fill work, excavation and removal and deposit of material or grading requires a development permit under these Regulations.

2. Removal or deposit of soil, or the excavation and removal of excavated material or grading which requires a development permit provided the work is based on a grading plan, will result in an improved site for use classes permitted in the Zone where it is located, and meets the following conditions:
    a. land intended for the activity or grading has a slope of less than 25%;
    b. resulting slopes are stable and without hazards;
    c. when the work is completed, the area affected shall be covered with topsoil and other necessary material for vigorous plant growth and planted with appropriate vegetation;
    d. The use is clearly a subsidiary use to the residential use, and
    e. drainage must be provided to the satisfaction of Council, and will be designed so as not to impair existing surface drainage nor to create erosion either on the site or on adjacent sites.

3. In areas that are environmentally sensitive or hazardous for development due to wet or unstable soils, or unstable geological conditions or steep slopes, Council shall restrict development, or subject it to terms and conditions, to reduce potential impacts. Council may also require a suitability and compaction test on imported soil intended for building purposes, or for the development applicant to engage a qualified professional to provide a report and/or geotechnical review and recommendations at the expense of the proponent on the proposed development for Council's consideration including consideration of slopes adjacent to other lands, and, if development is to proceed, a minimum building development setback area for habitable building uses will apply.

4.1.10 Water Body Protection (flood risk areas, water course/wetland, water supply)

Definition: (From the *Water Resources Act, 2002*) "body of water" means a surface or subterranean source of fresh or salt water within the jurisdiction of the province, whether that source usually contains liquid or frozen water or not, and includes water above the bed of the sea that is within the jurisdiction of the province, a river, stream, brook, creek, watercourse, lake, pond, spring, lagoon, ravine, gully, canal, wetland and other flowing or standing water and the land occupied by that body of water;

4.1.10.1 Flood Risk Area:

For Work near or in a Body of Water Adjacent to or Within Flood Risk Area, the following applies:

1. Prior to the start of construction, the proponent must apply for and obtain a permit under the Water Resources Act, 2002, specifically Section 48 http://assembly.nl.ca/Legislation/sr/statutes/w04-01.htm for any work within any designated flood risk area prior to the start of construction.
2. Any work within designated flood risk areas must comply with this Department's Policy for Flood Plain Management. Contact: Manager, Hydrologic Modelling Section - (709) 729-2295
3. In Table 1 where projects may be permitted with conditions, the following conditions will apply:
   a. the ground floor elevation of the structure is higher than the 1:100-year flood level and the climate change flood zone (where designated), and,
   b. the structure will not interfere with the flow of water or displace water such that it creates a worse flooding situation for other properties, and,
   c. the structure and the associated utilities must be designed and constructed in accordance with the approved flood proofing guidelines of the Department and entrances and exits from the building can be safely used without hindrance in the event of a flood, and,
   d. the proposed use of the facility and site will not involve any storage of pollutants such as fuels, chemicals, pesticides etc., and,
   e. additional conditions which may be appropriate for specific projects and included in a permit issued under Section 48 of the *Act*.

Table 1 below indicates whether not project categories are permitted in each of the defined flood plains.

TABLE ONE – FLOOD RISK ZONES				
Category	**All Flood Plains**	**WHERE FLOOD PLAINS ARE DESIGNATED**		
		Floodway (1:20 year Zone)	**Floodway Fringe (1:100-year Zone)**	**Climate Change Flood Zone**
Temporary alterations	Permitted	Permitted	Permitted	Permitted
Non-structural uses	Permitted	Permitted	Permitted	Permitted
Structures related to use of water resources	Permitted	Permitted	Permitted	Permitted
Minor structural or other projects	Permitted	Permitted with conditions*	Permitted with conditions*	Permitted with conditions*
Other structures not used primarily for residential	Permitted with conditions*	Permitted with conditions*	Permitted with conditions*	Permitted with conditions*
Industrial Uses related to shipping (marine only)	Permitted with conditions*	Permitted with conditions*	Permitted with conditions*	Permitted with conditions*
Other industrial and commercial	Not Permitted	Permitted with conditions**	Permitted with conditions*	Permitted with conditions*
Institutional	Not Permitted	Not Permitted	Not Permitted	Not Permitted
Residential and other institutional	Not Permitted	Not Permitted	Permitted with conditions*	Permitted with conditions*
Hydraulic Structures	Permitted	Permitted	Permitted	Permitted

4. In general, it is the policy of the Department of Municipal Affairs and Environment ("the Department") that flood plains and the buffer zone be preserved and left in their natural state. Recognizing that this is an ideal that would hinder significant benefits that could be derived from certain development in a flood plain and outweigh all risk of loss, damage or peril, the provincial policy for flood plain management views any application to avail of land in flood risk areas in decreasing order of preference. These preferences are referred to hereafter as project categories.
    a. Temporary alterations in a buffer zone, a climate change flood zone, a designated floodway fringe, a flood plain, a designated floodway, and lastly, the body of water itself.

b. Non-structural uses such as open space recreation, pasture, and wildlife habitat enhancement.
c. Structures related to use of water resources such as wharves, slipways, boathouses, pumping stations, storm or sewerage discharges.
d. Minor structural or other projects where only soil disturbance is involved such as constructed trails, pipelines, transmissions lines, roads, etc., assuming there will be no change in the grade of the land.
e. Other structures not used primarily for residential, commercial, industrial or institutional purposes where there will be a change in grade but not a building.
f. Industrial uses related to the marine shipping or fishing industries.
g. Other industrial and commercial development.
h. Institutional developments such as hospitals, senior citizens homes, homes for special care or schools where flooding could pose a significant threat should evacuation become necessary.
i. Residential and other institutional development.

5. Council may require submission of a qualified professional's certified report and recommendations from the development applicant to substantiate the flood risk management integrity of the proposed development.

6. Land uses such as schools, residential institutions such as care facilities for seniors, police and fire stations and other facilities that provide emergency services, uses associated with storage and warehousing, and the production or storage of hazardous materials such as gas stations, shall not be permitted on lands located within, or adjacent to, flood risk areas.

7. Additions and Modifications to Existing Development

   Additions, modifications, enhancements and improvements to existing structures where there is an increase in the floor area within the flood plain, will be assessed for suitability in the same way as the project category as a whole.

4.1.10.2 Watercourse or Wetland

For development Within or Adjacent to a Watercourse or Wetland, the following applies:

1. All portions of a lot that are located within 15 metres of the edge of a wetland or the top of the stream bank of a watercourse, will be subject to the following:
   a. No building or structure will be permitted, except for:
      i. reconstruction of a building that was in existence on the date of approval of this Municipal Plan
      ii. an accessory building or structure to (1) above
      iii. a passive recreational use
      iv. an accessory building or other accessory use to an existing building.
   b. Ensuring conformance with requirements of the Water Resources Management Division of the provincial government and securing a permit from this Division;

2. Subject to the appropriate approvals and reviews, wharves, boathouses, slipways and breakwaters may be permitted within the 30 m buffer provided that they conform to the guidelines provided by the Water Resources Management Division;
3. Where fish habitat is affected, Fisheries and Oceans Canada must be consulted;
4. Subject to the appropriate approvals and reviews, only roads, public services and utilities, trails and accessory uses, and uses requiring direct access to a body of water may be permitted within the 30 m buffer area;
5. No principal development structure shall be constructed within 30 m of a body of water; and,
6. On-site sewerage disposal systems are prohibited within 30 metres from a waterbody or watercourse;
7. Where Council believes that a proposed development may affect a wetland, it shall be a policy of Council to, at its discretion:
    i. Require the developer to have the wetland delineated by a qualified environmental consultant and/or professional hydrologist;
    ii. Establish a sufficient buffer from the edge of the wetland, in which development will not be permitted;
    iii. Require other conditions or restrictions to protect the wetland; and/or
    iv. Refuse to approve the development if it believes that identified impacts cannot be sufficiently minimized or mitigated.

4.1.11 T'Railway Provincial Park

The T'Railway Provincial Park (shown as an overlay on the Land Use zoning map) is subject to the Provincial Park Regulations under the Parks Act. It is administered by the Department of Tourism, Culture, Industry and Innovation, including applications for road crossings.

4.1.12 Excluded Uses in Town of Pasadena Planning Area

The Town of Pasadena does not support varied land use activities that may negatively impact the small-town character, safety and livability of the community, noted as follows:

- Uses related to Adult Entertainment;
- Methadone dispensing clinics;
- The household keeping, commercial display and sales of exotic snakes and reptiles;
- Industrial activities that cause air-borne, terrestrial and marine environment pollution impacts.

4.2 AGRICULTURE LAND USE CLASS

4.2.1 Commercial Agriculture

Definition: Commercial Agriculture means of farm operation as specified in the *Farm Practices Protection Act, 2000.*

Conditions:

1. No structure for a Livestock and Poultry Farm Operation shall be erected or used unless it complies with the conditions set out in the Environmental Farm Practices Guidelines for Livestock Producers

in Newfoundland and Labrador and Environmental Farm Practices Guidelines for Poultry Producers in Newfoundland and Labrador;

2. The structure shall be at least six hundred metres (600 m) from:
    a. a residence (except a farm residence or a residence which is a nonconforming use in any zone in which agriculture is a permitted use class in the Use Zone Schedules of these Regulations),
    b. an area designated for residential use in an approved Plan, and
    c. a Provincial or Federal Park.
3. The structure shall be at least forty-five metres (45 m) from the boundary of the property on which it is to be erected.
4. The structure shall be at least ninety metres (90 m) from the centre line of a street.
5. The erection of the structure shall be approved by the Land Stewardship Branch, Government of Newfoundland and Labrador.
6. Manure storage must be located 100 m from the boundary of the property; Service NL must approve all manure systems
7. No development for residential use shall be permitted within six hundred metres (600 m) of an existing structure designed to contain more than five animal units unless the development is first approved by Land Stewardship Branch, Government of Newfoundland and Labrador. Animal units are set out by the Land Stewardship Branch as follows:

Type of Livestock	**Number of Livestock =1 Animal Unit**
Dairy Cows	1
Heifers	2
Veal	5
Bulls	1
Beef Cattle	2
Sows (Faro to Finish)	1
Sows	3
Hogs	6
Boars	3
Sheep (ewe)	8
Sheep (lamb)	16
Goats	7
Foxes (w/litter)	40
Mink	150
Rabbits	200

8. Approvals must be obtained from the Agri-foods Development Branch, Government of Newfoundland and Labrador for any commercial farming operation.

4.2.2 Urban Agriculture

Definition: Urban Agriculture for the Town of Pasadena means non-farm raising of backyard chickens.

Conditions:

1. The detached dwelling property has a minimum lot size area of 558 m^2 or larger;
2. The home owner must reside on the property where the chickens are to be kept;
3. A maximum of 6 chickens will be permitted but no roosters are allowed;
4. Chickens are to be kept in a hen coop between the hours of 9 p.m. to 7 a.m. The chicken coup structure is to be located within the rear yard of the residential dwelling, the coup is to be constructed to acceptable standards and of a design appropriate for the adjacent residential neighbourhood, and complimented by an enclosed hen run area;
5. When not in their coup, chickens are to be kept within the enclosed hen run;
6. Hen coups and hen runs are to be sited a minimum of 1.5 m from the rear lot line and from the rear side lots to an adjacent property, except adjacent to any schools, church or business wherein the setback separation distances to rear and side lot lines shall be a minimum of 15 m;
7. Hen coups and hen runs shall be maintained in a clean condition, free of obnoxious odours, substances and vermin;
8. Stored manure shall be kept within an enclosed structure such as a compost bin, no more than 0.08 cubic metres of manure shall be stored at any one time and the manure shall be disposed in accordance with local health regulations;
9. Home slaughter of hens is prohibited and any deceased hens shall be disposed in accordance with local health regulations;
10. Any contravention of the cited backyard chicken provisions shall be remedied by the property owner when requested by the Town. Failure to comply will result in an order from the Town to cease the backyard chicken operation, and to remove the chickens, the hen coup and hen run from the property.

4.3 COMMERCIAL LAND USE CLASS

This class includes land uses and development for activities providing for the sale of goods and services. Generally, the Use Zone standards apply; however, as required, specific conditions are tailored to the activity and associated traffic in order to address public health, safety and conservation issues and achieve the intent of the community of the land use zone in which the activity is located.

4.3.1 Amusement Establishment/Use

Definition: Amusement Establishment/Use means the use of land or a building or a part thereof used by the public for indoor non-sport games, such as, billiard and pool halls, bingo hall, mechanical amusement games (more than three game machines), video games. It does not include those on the premises of a hotel or bar.

Condition:

1. Must meet Use Zone Site Development Standards;

4.3.2 Amusement Park/Attraction

Definition: Amusement Park/Attraction means an outdoor area where buildings or structures may be permanently or temporarily erected for the purpose of amusement, entertainment or education of a large number of people, including a circus, carnival, midway show, race-track, sideshow, fairgrounds, or similar exhibition which may have mechanically or electrically operated amusement rides or games, and theme parks.

Conditions:

1. Required to submit a Comprehensive Development application (2.2.2 & 2.2.4);
2. Must meet Use Zone Site Development Standards or explain exceptions in the plan;
3. Appropriate noise and separation measures shall be incorporated into the development to reduce noise impact on surrounding properties;

4.3.3 Auto Body Shop

Definition: Auto Body Shop is a building or a clearly defined space on a lot used for the storage, repair and servicing of motor vehicles including body repair and painting and detailing but does not include a service station or an automobile repair shop or an automotive sales establishment.

Conditions:

1. Must meet Use Zone Site Development Standards;
2. Must be 20 m from a residential lot;
3. Appropriate noise and separation measures shall be incorporated into the development to reduce noise impact on surrounding properties.
4. There shall be no outdoor storage of inoperable vehicles on the premises and no scrapping of vehicles shall be permitted;
5. Must apply measures to minimize any noise, spray or fumes through the installation of appropriate equipment; and all waste fluids and tires shall be disposed of in accordance with applicable provincial regulations;
6. Appropriate noise and separation measures shall be incorporated into the development to reduce noise impact on surrounding properties.

4.3.4 Automotive Repair Shop

Definition: Automotive Repair Shop means a development for the servicing and repair of motor vehicles. This definition includes but is not limited to transmission repair shops, muffler repair shops, tire shops, automotive glass shops, auto body repair, painting and detailing, and automotive upholstery shops, but does not include an automotive sales establishment, a service station, or salvage or wrecking and recycling yard.

Conditions:

1. Must meet Use Zone Site Development Standards;
2. Appropriate noise and separation measures shall be incorporated into the development to reduce noise impact on surrounding properties;

3. There shall be no outdoor storage of inoperable vehicles on the premises and no scrapping of vehicles shall be permitted;
4. Outline measures to minimize any noise, spray or fumes through the installation of appropriate equipment; and all waste fluids and tires shall be disposed of in accordance with applicable provincial regulations;
5. A minimum buffer between residential use and vehicle repair, body repair, car wash shall not be located closer than 20m from residential use; and,
6. A parking area abutting a residential lot shall be appropriately screened by a fence, wall, or hedge of height not less than one (1) metre and located a minimum distance of 1 metre from the edge of the parking area.

4.3.5 Automotive Sales and Service Establishment

Definition: Automotive Sales and Service Establishment means a lot, building or structure used for the display and sale of new or new and used motor vehicles, including trucks and mobile homes; and may include the servicing, repair, cleaning, polishing, and lubrication of motor vehicles; the sale of automotive accessories and related products; and the leasing or renting of motor vehicles.

Conditions:

1. The application submitted by the developer shall include the following:
    a. the number and location of parking spaces,
    b. ingress and egress of the parking lot,
    c. motor vehicle circulation pattern around the lot,
    d. location of any building on the lot,
    e. area to be landscaped and screened and the type of landscaping to be used, and
    f. customer parking in accordance with these regulations.
2. The automotive sales use shall have a principal building on the lot in which the business is conducted. The principal building will include washroom facilities and shall be connected to municipal water and sewer services where such services exist. Where municipal water and sewer services do not exist, the washroom facilities of the principal building shall be approved by and meet the requirements of the Provincial Department of Health.
3. The automotive sales lot shall be paved and shall provide drainage, lighting, curbs, and landscaping in accordance with the requirements of Council;
4. Appropriate noise and separation measures shall be incorporated into the development to reduce noise impact on surrounding properties;
5. The automotive sales use shall be licensed under the Automobile Dealers Act prior to the use commencing.

4.3.6 Bar

Definition: Bar means a development licensed for the sale of alcoholic beverages to the public, for consumption within the premises and where entertainment and meals may be provided. Typical Uses include dance clubs, cabarets, nightclubs, lounges, tavern, neighbourhood pubs and bars, brewpub, beverage rooms, private clubs, cocktail lounges, and similar uses.

Conditions:

1. Must meet Use Zone Site Development Standards; and,
2. Must be 100 m from a residential lot
3. Appropriate noise and separation measures shall be incorporated into the development to reduce noise impact on surrounding properties;
4. A brewpub is primarily an eating and drinking establishment (restaurant) with a small brewery on the premises which produces beer, ale, or other malt beverage, and where the majority of the beer produced is consumed on the premises. A brewpub may sell beer at retail and/or act as wholesaler for beer of its own production for off-site consumption as long as it meets the limitation of producing a maximum of 2,400 barrels per year of beer, ale, or other malt beverages on-premises.

4.3.7 Building Supply Store

Definition: Building Supply Store means a building or land on which building and construction supplies and home improvement materials are kept for sale.

Conditions:

1. Must meet Use Zone Site Development Standards; and,
2. Appropriate noise and separation measures shall be incorporated into the development to reduce noise impact on surrounding properties.

4.3.8 Business Support Service

Definition: Business Support Service means development used to provide support services to businesses which are characterized by one or more of the following features: the use of mechanical equipment for printing, duplicating, binding or photographic processing; the provision of office maintenance, custodial or security service, and the sale, rental, repair or servicing of office equipment, furniture and machines.

Conditions:

1. Must meet Use Zone Site Development Standards
2. Appropriate noise and separation measures shall be incorporated into the development to reduce noise impact on surrounding properties.

4.3.9 Campground, including RV campgrounds

Definition: Campground, including RV campgrounds means a public or privately-operated facility offering overnight to seasonal camping experiences for 3 or more tent sites or serviced recreational vehicle sites and including accessory administrative offices, convenience store, laundry facilities, sanitary facilities, recreational hall and associated recreational uses that cater to short-term guests, not to year-round residents and does not include industrial, work or construction camps or permanent mobile home or mini-home parks;

Conditions:

1. A proposed campground, including trailer and Recreational Vehicle park, will require a Comprehensive Development application (2.2.2 & 2.2.4) satisfactory to Council containing the following information:
    a. Location and size of camp and trailer sites
    b. Internal roads and accesses
    c. Parking areas
    d. Accessory uses such as laundry facilities, storage areas, washrooms, showers, convenience store, staff accommodations, and outdoor and indoor recreation facilities
    e. Water supply and waste disposal
    f. Landscaping
    g. Buffers and screening between the site and other nearby land uses
    h. Delineation of the property to be developed on a legal survey
2. Where deemed necessary by Council, a phasing plan for development.
3. On-site water and sewer services must meet minimum standards required by Council and relevant Provincial agencies.
4. Washroom facilities, recreational areas, parking areas, and similar facilities directly associated with the development will not be located on separate properties.
5. All camp sites and on-site facilities that form part of the development will be accessible only via the internal road network of the development.
6. The development permit will specify the maximum number of campsites for different uses such as tents, trailers, and RVs that will be permitted on the site.
7. No expansion or alteration of a campground, other than repairs and maintenance, will take place without the approval of Council.
8. The operation will comply with all bylaws and regulations of Council pertaining to noise and unruly behaviour.
9. Where deemed necessary by Council, a deposit sufficient to cover the cost of buffers and screening shall be deposited with Council until the work is completed in accordance with the approved plan.

4.3.10 Child Care – non-residential

Definition: Child Care – non-residential means a building or part of a building in which personal care services are regularly provided to children for group day care, family day care, pre-school, play school, out-of-school care, specialized day care, and emergency day care, all as licensed and regulated by the Province of Newfoundland and Labrador, but does not include a school as defined by the *Schools Act, 1997*.

Conditions:

1. A Child Care Centre shall be duly licensed and approved, staffed, equipped and operated in accordance with the requirements of the agencies having jurisdiction or authority;
2. The section of the street on which the use is located allows sufficient area and sight distance for the safe and convenient drop off and pick up of children without hindering the safety and convenience of vehicular and pedestrian traffic on the street, or the development provides adequate off-street drop off or pick up spaces satisfactory to Council;

3. Child care services shall be permitted as an accessory home-based business use at and within appropriately located detached homes within residential neighbourhoods, in accordance with the general provisions within Policy HB-2 that follows, and based upon a maximum of 6 children for day or after school care with any accessory child care use, and contingent upon the child care use operating hours being from 7 a.m. to 7p.m.
4. Larger facilities for child care day and after school use of more than six (6) are to be located within a Public Use zone.
5. All applicants for a home-based child care use shall provide to the Town documentation of support from adjacent residential neighbours, certification of any required approvals from the Province for health inspection and for food safety, engineering certification of the fire and life safety integrity of the subject residential dwelling, and shall apply for an operating annual license from the Town and payment of home-based business fee.

4.3.11 Club and Lodge

Definition: means a building or structure used by a non-profit association or organization for fraternal, social, or recreational purposes.

Conditions:
1. Must meet Use Zone Site Development Standards
2. Note that this can also be an Accessory Use (refer to section 5.1)

4.3.12 Contractor, Limited (Small)

Definition: Contractor, Limited (Small) means a building or part thereof providing services for electrical, plumbing, heating, painting and similar contractor services to individual households including accessory sale of goods associated with this service where all materials are within an enclosed building and there is no accessory manufacturing or fleet of vehicles consisting of more than 4 vehicles.

Conditions:
1. Must meet Use Zone Site Development Standards;
2. Appropriate noise and separation measures shall be incorporated into the development to reduce noise impact on surrounding properties;

4.3.13 Convenience Store

Definition: Convenience Store means a building which is used as a retail store providing a range of household and grocery items, and may include postal services, take-out, and may be licensed to sell alcohol, but is not a supermarket.

Conditions:
1. The store may form part of, or be attached to, a dwelling unit or be a stand-alone building;
2. The retail use shall be subsidiary to the residential character of the area and shall not affect residential amenities or adjoining properties;
3. The take-out use shall be subject to the conditions set out in 4.3.26.1:

a. Adequate provision for on-site parking, loading, buffering and landscaping must be provided; and,
b. The hours of operation are appropriate to the nature of the building and surrounding neighbourhood and the operation does not create a nuisance.
c. Must meet Use Zone Site Development Standards;

4. A Take Out associated with a convenience store shall be subject to the following standards:
5. A Take-Out Food Use shall have a parking area or stacking lane with a minimum length before the pick-up window, as determined by Council based on the anticipated on the level of traffic to be generated;
6. Order boards and signage shall be designed to minimize impact on adjacent residential or institutional uses.
7. As determined by Council: A buffer consisting of a sound-proof fence and landscaping may be required adjacent to residential uses. A fence, berm, and landscaping or a combination of these elements shall be used to reduce headlight glare, lighting, and noise from the Take Out; garbage receptacles shall be placed either before the pick-up window or after the pickup window.

4.3.14 Custom Manufacturing Service

Definition: Custom Manufacturing Service (small/artisan) means a building where goods are stored, produced, assembled, or repaired to consumer specifications and sold at retail on the premises and may include welding, sheet metal, woodworking, flooring and tile contractors, and machine shop.

Conditions:

1. Must meet Use Zone Site Development Standards;
2. Appropriate noise and separation measures shall be incorporated into the development to reduce noise impact on surrounding properties;

4.3.15 Garage, Public

Definition: Garage, Public means a building or place other than a private garage where motor vehicles are kept or stored for remuneration or repair, or a building or place used as a motor vehicle repair shop which does not include any automatic car washing establishment, a motor vehicle sales establishment or an automobile service station.

Conditions:

1. Must meet Use Zone Site Development Standards;
2. Must be located 20 m from residential uses; and appropriate noise and separation measures shall be incorporated into the development to reduce noise impact on surrounding properties;

4.3.16 General Service/Repair

Definition: General Service/Repair means an outlet for servicing, repairing, installing, or renting items and equipment, without limiting the generality of the foregoing, includes the following examples, radio,

television, and computer service and repair shops; locksmith shops; small appliance service or repair shops; household and limited contractor service or repair shops; tools and equipment rental shops.

Conditions:

1. Must meet Use Zone Site Development Standards
2. Appropriate noise and separation measures shall be incorporated into the development to reduce noise impact on surrounding properties

4.3.17 Hotel or Inn

Definition: means a commercial establishment offering lodging and guest services to travelers and sometimes to permanent residents, and may have restaurants, meeting rooms, conference facilities, a lounge, stores, etc., that are available to the general public. In general, to be called a hotel, (not a bed and breakfast), an establishment must have a minimum of six letting rooms, at least three of which must have ensuite private bathroom facilities.

Conditions:

1. Required to submit a Comprehensive Development application (2.2.2 & 2.2.4)
2. Must meet Use Zone Site Development Standards or explain exceptions in the plan

4.3.18 Marina

Definition: Marina means a dock or basin together with associated facilities where slips, moorings, supplies, repairs, and other services that are typically available for boats and other watercraft, including storage, sales and rentals, with or without a club house and catering facilities. It can also include a boat-house or shed associated with a dock or wharf.

Conditions:

1. Required to submit a Comprehensive Development application (2.2.2 & 2.2.4)
2. Must meet Use Zone Site Development Standards
3. Provide and maintain public access to the shoreline via a walkway, path or trail, located, designed and constructed to the satisfaction of the Council
4. Parking shall be provided for both vehicles and boat trailers with adequate turning areas within the parking lot;
5. Outdoor storage areas for boats or other equipment shall be landscaped and screened to the requirements of the Council;
6. Marinas shall be serviced with a supply of potable water and facilities for the collection and disposal of wastewater in a manner acceptable to the Council;
7. Wharf/Boathouse/Slipway/Breakwater structures shall follow the guidelines for the *Construction and Maintenance of Wharves, Breakwaters, Slipways and Boathouses* which are available at: http://www.env.gov.nl.ca/env/waterres/regulations/appforms/Guidelines_for_Wharves.pdf
8. The Applicant must obtain a permit under of the *Water Resources Act, 2002* under Section 48 (http://assembly.nl.ca/Legislation/sr/statutes/w04-01.htm) for any infilling or dredging work

associated with these structures or other works near or in any body of water prior to the start of construction. Contact: Manager, Water Rights & Investigations Section - (709) 729-4795

4.3.19 Medical or Dental Clinic/Office

Definition: Medical or Dental Clinic/Office means a building or part thereof used by qualified physicians, dentists, osteopaths, counselors, or other drugless practitioners, including their staff and patients, for the purpose of out-patient consultation, diagnosis and office treatment. A medical clinic may include accessory uses such as waiting and treatment rooms, laboratories, dispensaries and administrative offices. A medical clinic does not include accommodation for overnight patient care or operating room facilities.

Condition:

1. Must meet Use Zone Site Development Standards

4.3.20 Motel

Definition: Motel means an establishment providing accommodation for travelers or the transient public that consists of one or more than one building containing four or more attached accommodation units accessible from the exterior only and may or may not have facilities for serving meals.

Conditions:

1. Required to submit a Comprehensive Development application (2.2.2 & 2.2.4)
2. Must meet Use Zone Site Development Standards

4.3.21 Outdoor Commercial Patio

Definition: Outdoor Commercial Patio means any outdoor area used in conjunction with any establishment licensed under the *Liquor Control Act, 1990*, where meals or refreshments are served to the public for consumption on the premises.

Conditions:

1. An outdoor commercial patio shall not accommodate more than 50 percent (50%) of the licensed part of the restaurant with which the patio is associated, or 50 persons, whichever is the greater.
2. No outdoor commercial patio shall be permitted in any yard facing or abutting a residential zone or abutting a yard or lane facing or abutting a residential zone unless:
    a. it is located a minimum of thirty metres (30 m) from the residential zone; and
    b. it is screened and physically separated from the residential zone by a building, structure or wall that is at least two metres (2 m) in height so that noise from the outdoor patio is mitigated.
3. Unless otherwise determined by Council, an outdoor commercial patio shall have a minimum setback of one decimal five metres (1.5 m) from any lot line.
4. The location of an outdoor commercial patio on a lot shall not obstruct the view or path of pedestrian and vehicular traffic that accesses or egresses to or from a street onto or out of the lot.
5. The outdoor commercial patio must not encroach on or eliminate any required parking or loading space, driveway or aisle for the lot on which it is located.

6. The outdoor commercial patio shall be so located on the lot as to not interfere with snow clearing and snow operations of Council.
7. No outdoor commercial patio shall be so located above the elevation of the floor of the first storey of the principal building where the lot adjoins a residential use zone.
8. Any outdoor lighting shall be directed toward or onto the outdoor commercial patio area and away from adjoining properties and streets.
9. No loading space shall be required for an outdoor patio restaurant.
10. No music (whether performed live or recorded), dancing or other forms of entertainment shall be permitted.
11. Parking spaces shall be required for the gross floor area associated with the outdoor commercial patio use at the same ratio as for restaurants.

4.3.22 Outdoor Market

Definition: Outdoor Market means the sale of goods or products at an open property with no permanent buildings; temporary facilities or open stalls may be used to hold and display the goods being sold. Examples may include farmers markets, fish market, flea markets or other types of goods.

Conditions:

1. Must meet Use Zone Site Development Standards;
2. Appropriate noise and separation measures shall be incorporated into the development to reduce noise impact on surrounding properties;
3. Requires sufficient off street/highway parking for customers and ensure that the sight lines (visual) or sign distance at any intersection is not obstructed.

4.3.23 Personal Service

Definition: Personal Service means a building or part of a building used for the provision of personal services to an individual which are related to the care and appearance of the body, or the cleaning and repair of personal effects; and where the sale of retail of goods, wares, merchandise, articles, or things is only accessory to the provisions of such service, Examples include barbershops, hairdressers, beauty salons, health and wellness centres/spas, tanning salons, tattoo parlours, tailors, dressmakers, shoe repair shops, and dry cleaning establishments and laundromats. This Use Class does not include medical and dental clinics, and excludes any manufacturing or fabrication of goods for sale.

Condition:

1. Must meet Use Zone Site Development Standards

4.3.24 Offices: Professional, Financial and Associated Support Services

Definition: Offices means development primarily used for the provision of professional, management, administrative, consulting, and financial services, but does not include medical or dental clinics or government services. Typical Uses include: the offices of lawyers, accountants, engineers, and architects; offices for real estate and insurance firms; clerical, secretarial, employment, telephone

answering, and similar office support services; and banks, credit unions, loan offices and similar financial uses.

Condition:

1. Must meet Use Zone Site Development Standards

4.3.25 Resort

Definition: Resort means the use of land, buildings and structures to provide sleeping accommodations, communal or individual facilities for cooking and serving of meals for guests or a restaurant; recreation uses, such as golfing, tennis, lawn bowling, marinas, health spa, swimming pools, angling and other watersport activities, hunting and recreational shooting, cross-country skiing, sightseeing, camping, hiking, indoor recreational activities and other similar uses, plus gift and craft shops and the furnishing of equipment, supplies or services to guests in connection with any of the foregoing activities and may include accommodation for the operator and staff. (also includes Tourism Cottage Establishment

Conditions:

1. Required to submit a Comprehensive Development application (2.2.2 & 2.2.4)
2. Must meet Use Zone Site Development Standards

4.3.26 Restaurants

4.3.26.1 Restaurant - Drive-Through and Take-Out

Definition: Restaurant - Drive-Through-take-out means a building designed to allow drivers to remain in their vehicles before and during an activity on the site. Food and drink are prepared then sold to the public for immediate consumption either within an eating area inside or outside of the building or within the patron's own motor vehicle onsite, or for elsewhere off the premises it may include a seating area for in-house consumption and parking for in-house patrons. It is not licensed to sell alcoholic beverages.

Conditions:

1. A Drive-Through Restaurant shall have a stacking lane with a minimum length before the pick-up window, as determined by Council.
2. A minimum of six metres (6 m) after the pick-up window to on-site aisle or parking area.
3. Drive-through stacking lanes shall be located away from adjacent residential and institutional uses whenever possible.
4. Drive-through stacking lanes should be separated by raised islands, be well signed to provide for ease of use and located so as to avoid crisscrossing of lanes.
5. Order boards with an intercom shall be designed to minimize noise impact on adjacent residential or institutional uses. Council may require the applicant to undertake a Land Use Impact Assessment to assess the proposed Drive-Through Use and mitigation measures where the Drive-Through Use is in close proximity to residential uses.
6. No drive-through stacking lane, order window, or order board shall be located within ten metres (10 m) of a lot line abutting a residential use.
7. A buffer consisting of a sound-proof fence and landscaping shall be provided adjacent to residential uses. A fence, berm, and landscaping or a combination of these elements shall be used to reduce

headlight glare, order board lighting, and noise from the Drive-Through Use. Garbage receptacles shall be placed either before or after the pick-up window as determined by Council.

8. If the use of any land, building or structure is composed of a combination of Drive-Through Use and any one or more other uses, those uses shall not be construed as accessory to one another and all provisions pertaining to each use shall apply.
9. Required to submit a Comprehensive Development application (2.2.2 & 2.2.4)
10. Must meet Use Zone Site Development Standards

4.3.26.2 Restaurant-Full Service

Definition: Restaurants-Full service means a building or part of a building wherein the primary purpose is the preparation of food for sale to the public for consumption within the building and may include a take-out area. It is characterized by the provision of table service, including buffet service and may also be licensed to serve alcoholic beverages.

Conditions:

1. Must meet Use Zone Site Development Standards
2. Refer to Outdoor Commercial Patio for standards related to outdoor areas

4.3.26.3 Restaurant -Mobile Take-Out or Street Vendor

Definition: Restaurant-mobile take-out or street vendor means a mobile food preparation motorized vehicle or non-motorized cart offering food and non-alcoholic beverages for immediate consumption that subject to the requirements of the *Municipalities Act, 1999* and the *Highway Traffic Act, 1990*.

Conditions:

1. The parking of a vehicle or trailer for vending or office purposes shall only be permitted as a subsidiary use on a lot with an existing principal building.
2. The parking of a vehicle or trailer shall not be located on any required landscaped yards.
3. The parking of a vehicle or trailer shall only be permitted if the lot has a sufficient parking area to accommodate the parking requirements of the principal building or use on the lot and the subsidiary vehicle or trailer use with its associated parking.
4. The parking of a vehicle or trailer shall not hinder lot access or egress or create an obstruction to vehicles entering or exiting the lot.
5. If a vehicle or trailer is used for the purpose of the preparation, cooking, and/or sale of food and/or refreshments, the following approvals are required prior to the placement of a vehicle or trailer on the lot:
    a. approval from the Regional Fire Department regarding the appliances to be used and the required fire suppression measures, and
    b. approval from Service NL regarding the storage and preparation of food and/or refreshments.
6. A vehicle or trailer will be required to provide, or have access to, washroom facilities as determined by Council.
7. Council shall limit the length of the Development Permit to a maximum of one year and the permit may be renewed on an annual basis if the applicant wishes to continue the use.

4.3.27 Retail

Definition: Retail means a building or part of a building used for the *retail or consignment sale* of goods, wares, substances, or merchandise directly to the public within an enclosed building, including a drug store, appliance or clothing store, food store and shop; and includes storefront industrial, such as, bakeries, craft breweries (brewpubs), and artist studios, where small-scale production, processing, packaging and storage of food or beverages and/or other goods produced in limited quantities, using techniques that do not involve mass-production nor the use or production of flammable, explosive or other hazardous materials, where such an establishment includes an ancillary restaurant, retail food store or retail store use through which such goods are sold or served to the public on-site, and which goods may be sold or distributed wholesale to off-site users or resellers. Accessory uses may include the assembly or repair of products sold on site or public services such as postal services or pharmacy.

This use class does not include the sale of gasoline, heavy agricultural and industrial equipment, wholesale goods, automotive and recreation vehicle sales/rentals, flea market, gas bars, greenhouses, plant nurseries and market gardens, service stations, and box store or warehouse sales or shopping centre.

Condition:

1. Must meet Use Zone Site Development Standards

4.3.28 Shopping Centres/Retail Warehouse

Definition: Shopping Centres/Retail Warehouse means a large single-level individual store with a minimum of 1000 m^2 gross retail floor space normally selling goods such as Do-It-Yourself goods, building supplies, furniture, electrical goods, carpets and gardening goods, box stores, with car parking.

Conditions:

1. Required to submit a Comprehensive Development application (2.2.2 & 2.2.4)
2. Must meet Use Zone Site Development Standards

4.3.29 Service Station

Definition: Service Station means land or building used exclusively for the sale/installation of petroleum products and may include minor repair to vehicles, cleaning and maintenance essential to the actual operation of vehicles, and the sale of automotive accessories; but does not include an automotive body repair shop, automotive sales establishment. Service stations are classified as:

Conditions that apply to both Residential and Highway Service Stations: Minimum Standards for all Service Stations and Gas Bars, notwithstanding the development standards of the Use Zone in which a service station or gas bar is located, a service station and/or gas bar shall be subject to the following conditions:

1. Required to submit a Comprehensive Development application (2.2.2 & 2.2.4)
2. All gasoline pumps shall be located on pump islands designed for such purpose, and to which automobiles may gain access from either side, except in the case of propane, diesel, and kerosene pumps, which may access from one side;

3. Pump islands and canopies shall be set back at least 4 m from the required landscaped front or side yards;
4. Accesses shall not be less than 7 m wide and shall be clearly marked and, where a service station is located on a corner lot, the minimum distance between an access and the intersection of street lines at the junction shall be 10 m and the lot line between entrances shall be clearly indicated;
    - Lot Area (minimum) - 900 m^2
    - Lot frontage (minimum) - 48 m (or 35 m along each street at intersection)
    - Building Height (maximum) - 1 storey
    - Building Line (minimum) - 6 m
    - Building Line – Canopies (minimum) - 3 m

11. Surface runoff shall be directed to an oil/water separator before being discharged into a storm sewer or other drainage system;
12. Minimum of 2 access points for access/egress;
13. Landscaping required along front and exterior lot lines;

4.3.29.1 Service Station – Residential

Definition: Service Station – Residential is a service station which may have a convenience store, snack bar or drive-through or take-out restaurant subordinate to the main use.

Condition:

1. All Service station requirements apply.

4.3.29.2 Service Station –Highway

Definition: Service Station –Highway is a service station which includes a full restaurant, convenience store and other services for the travelling public; and may include a truck stop and services for transport trucks.

Conditions:

1. All Service station requirements apply; and,
2. Provide adequate separation of areas intended primarily for trucks from areas for cars, buses, recreational vehicles, vehicle washes, repair areas, trash enclosure areas and other traveler services waste dumping, passive recreation and structures such as a visitor information centre.

4.3.30 Veterinarian Clinic

Definition: Veterinarian Clinic means a building, structure or parts thereof where one or more registered veterinarian surgeons including associated staff provide examinations and surgical or medical treatment to domestic pets, animals or livestock, and may include treatment rooms, laboratories, dispensaries and associated office. Facilities for the overnight care of animals undergoing treatment may be permitted indoors and is considered incidental to the hospital use. A kennel is not permitted in association with a veterinarian clinic.

Condition:

1. Must meet Use Zone Site Development Standards.

4.4 INDUSTRIAL LAND USE CLASS

4.4.1 Aquaculture Facility

Definition: Aquaculture Facility has the meaning as defined in the *Aquaculture Act, 1990*.

Conditions:

1. Required to submit a Comprehensive Development application (2.2.2 & 2.2.4)
2. Must meet Use Zone Site Development Standards
3. Must meet requirements of provincial and federal agencies having jurisdiction for aquaculture development

4.4.2 Crematorium

Definition: A crematorium is a facility containing a certified furnace or similar device intended for use in the incineration of human or animal corpses.

Conditions:

1. A buffer between the crematorium and a sensitive land use, such as, a higher intensity land use with a concentration of employees, may be required at the discretion of the Council based on the following guideline:
    a. The buffer shall be a minimum of 70 m from a residential or sensitive land use, such as elementary and secondary schools, daycares unless there are extenuating physical characteristics of the site that would provide natural screening;
    b. The buffer between other industrial uses may be 30 m unless there are extenuating physical characteristics of the site that would provide natural screening;
2. All crematory facilities shall be located within an enclosed building that meets building and fire code requirements.
3. All applicable local, provincial, and federal laws and regulations shall be met.

4.4.3 Composting Facility

Definition: Composting Facility means a processing use that converts solid waste, including plant debris, decayed organic matter, municipal solid waste or agricultural waste, into a material to be used sold for the purpose of fertilizing and conditioning the soil for growing produce and nursery plantings.

Condition:

1. Must meet Use Zone Site Development Standards

4.4.4 Contractor, General

Definition: Contractor, General means development used for the provision of building construction, landscaping, concrete, and electrical, excavation, drilling, heating, plumbing, paving, road construction, sewer or similar services of a construction nature which require on-site storage space for materials, construction equipment or vehicles including heavy equipment, temporary storage containers,

construction trailers, and temporary office trailers normally associated with the contractor service. Any sales, display, office or technical support service areas shall be accessory to the principal general contractor service only. This use class does not include professional, financial and associated support services.

Conditions:

1. Must meet Use Zone Site Development Standards

4.4.5 Energy Generation Facilities

Definition: Energy Generation Facilities means a facility constructed for the purpose of generating electrical energy from wind, solar or small hydro means.

Conditions:

1. Required to submit a Comprehensive Development application (2.2.2 & 2.2.4);
2. Must meet Use Zone Site Development Standards;
3. General Requirement:

   The following requirements shall apply to wind, solar, and small hydro generating facilities:

   a. Energy utilities are subject to the approval of relevant provincial and federal departments, agencies, and public utilities, including the Department of Natural Resources and Transport Canada. The design and location of such utilities shall take into consideration their impact on nearby land uses and persons, the environment, archaeological resources, and other matters that Council may deem to be significant.
   b. A wind, solar, or small hydro generator within a built-up residential area will be limited to a single unit that serves an individual property.
   c. An adequate separation distance will be maintained between wind generators and nearby buildings and structures to prevent damage to persons and properties due to a failure of a generator or any of its components or the shedding of ice.
   d. Unless specifically exempted by Council or other relevant agencies, the design, construction and location of an energy utility shall be certified by a professional engineer who has consulted with the required agencies.
4. Specific requirements for a Wind Turbine Generator (defined as a structure designed to convert wind energy into mechanical or electrical energy)

   a. The Wind Turbine Generator development shall not create hazards or any negative impacts on neighbouring properties. In cases where there are potential conflicts or impacts between a proposed development and neighbouring property, Council may require the developer to ensure that adequate buffers or screening are maintained to reduce the impacts on adjoining properties or other mitigation measures that may be necessary to reduce the impacts.
   b. The wind turbine tower shall be located to minimize visual impacts on the Town.
   c. The wind turbine tower shall have a clear unobstructed fall zone that has a radius equal to or greater than the height of the structure and is accommodated within the property bounds.
   d. The wind turbine tower shall be designed and constructed and certified to meet design loads for operational requirements including ice buildup. The blades shall either have de-

icing capabilities or be constructed of a material (i.e. poly carbonate composite) that resists ice buildup.

e. Access to the site shall be restricted and shall include: fencing, gate, and signage posted as to the property owner, company name, twenty-four (24) hour emergency telephone number, and warnings of dangers to trespassers.
f. Should the wind turbine cease operations for a period of longer than two (2) years, the wind turbine, tower, and any related infrastructure shall be removed from the property.
g. Private turbines shall primarily be for the generation or electrical power for the property owner of a residential use, for business owners and for varied public use buildings and other similar sites.
h. Council may determine that the minimum parcel size of 2000 m^2 with a wind turbine height of approximately 10 m; if this is not sufficient to mitigate impacts to adjacent properties, and in such instances, the wind turbine proposal may be denied by Council.

4.4.6 Fishery Use

Definition: Fishery Use means land and buildings used for the production, processing, storage and maintenance of fishery products or equipment including aquaculture, and shall include land and buildings designated for the building, launching, docking or storage of a commercial fishing vessel, and similar operations, such as a marine centre, fish processing plant.

Conditions:

1. Required to submit a Comprehensive Development application (2.2.2 & 2.2.4)
2. Must meet Use Zone Site Development Standards

4.4.7 Forestry Activities

Definition: Forestry Activities have the meaning as defined in the *Forestry Act, 1990*.

Conditions:

1. Required to submit a Comprehensive Development application (2.2.2 & 2.2.4), or a Forestry Management Plan and to submit, every year, the annual operating plan and Domestic Harvesting areas for Council review and input;
2. All forestry plans and forest management and harvesting report and applications shall provide information and mapping to address how they will protect the viewscape within the Municipal Planning Area for the Town of Pasadena, particularly as viewed from the TCH and the floor of the Humber Valley;
3. Must meet Use Zone Site Development Conditions;
4. Permits for commercial and domestic woodcutting or other forestry related activities must be obtained from the Regional Forestry Office, Government of Newfoundland and Labrador;
5. All commercial harvesting operators must apply for a development permit.

4.4.8 Industrial - General

Definition: Industrial - General means development used principally for one or more of the following activities:

a. the processing of raw materials;
b. the making, manufacturing or assembling of semi-finished or finished goods, products or equipment;
c. the cleaning, servicing, repairing or testing of materials, goods and equipment normally associated with industrial or commercial businesses or cleaning, servicing and repair operations to goods and equipment associated with personal or household use, where such operations have impacts that would make them incompatible in non-industrial zones;
d. the storage or trans-shipping of materials, goods and equipment;
e. the distribution and sale of materials, goods and equipment to institutions or industrial and commercial businesses for their direct use or resale;
f. transport establishments, which include the use of land, buildings, structures or parts thereof, where commercially licensed trucks, transports and buses are rented, leased, loaded or unloaded, serviced or repaired kept for hire, stored or parked for dispatching as common carriers or where goods are temporarily stored for further shipment. Fuel and petroleum products may be dispensed and parts and accessories sold; or
g. the training of personnel in general industrial operations.

Examples include factories, fish processing plants, marine service centres, cold storage plants, freight depots, concrete plant, general garage, warehouses and welding shops, vehicle body repair and paint shops/depots, and similar uses. This use class does not include utility services or the preparation of food and beverages for direct sale to the public.

Conditions:

1. Required to submit a Comprehensive Development application (2.2.2 & 2.2.4)
2. Must meet Use Zone Site Development Standards
3. Minimum of 2 access points for access/egress;
4. Surface runoff shall be directed to an oil/water separator before being discharged into a storm sewer or other drainage system;
5. Appropriate noise and separation measures shall be incorporated into the development to reduce noise impact on surrounding properties;

4.4.9 Industrial – Heavy And/or Hazardous

Definition: Industrial – Heavy And/or Hazardous means industrial uses, which, by their nature, generate noise, fumes, odours, and are hazardous or obnoxious.

This would include manufacturing uses which are required to be registered under *the Environmental Assessment Regulations, 2003,* such as:

- Processing of meat, fish and poultry products
- Feed Mills
- Distilleries, breweries or wineries
- Manufacture of rubber products such as tires and tubes
- Manufacture of plastic products

- Leather and allied products such as leather tanneries
- Manufacture of textile products
- Sawmills, planing mills, shingle mill products industries
- Paper and allied products manufacturing
- Manufacturing, refining and fabricating of metal products
- Manufacturing of clay products, cements, and other non-metallic mineral
- products
- Refining of petroleum products
- Manufacture of chemical and chemical products including industrial,
- agricultural, plastics and synthetic resins, paints and varnishes, soaps and cleaning compounds
- Other manufacturing uses including photographic films and plates, floor tiles and coated fabrics manufacturing.

Conditions:

1. Required to submit a Comprehensive Development application (2.2.2 & 2.2.4)
2. Must meet Use Zone Site Development Standards

4.4.10 Industrial - Light

Definition: Industrial - Light means the use of any land or buildings for any general industrial use that can be carried out without hazard or intrusion and without detriment to the amenity of the surrounding area by reason of noise, vibration, smell, fumes, smoke, grit, soot, ash, dust, glare or appearance., unsightly outdoor storage, refuse matter, or effluent Examples include recycling depot, wholesale and warehouse uses, rental storage uses, commercial – custom service, catering services, bakeries, food processing, light manufacturing and assembly (clothing, furniture, consumer electronics), micro-distillery (no restaurant), broadcast studio, and similar uses; but does not include a salvage/scrap yard.

Conditions:

1. Required to submit a Comprehensive Development application (2.2.2 & 2.2.4);
2. Must meet Use Zone Site Development Standards;
3. Light industry uses may must be conducted and wholly contained within an enclosed building and shall not be obnoxious by reason of noise, vibration, odour, dust, smoke, unsightly outdoor storage, refuse matter, or water carried waste. Such uses shall not involve the use of chemical processes which result in the emission of gases, use of significant volumes of water or which generate significant levels of truck traffic.
4. Up to a maximum of 25% of the total floorspace may be used for retail/office space for light industrial uses, including high technology uses and similar business types on serviced industrial lands.

4.4.11 Industrial Mall

Definition: Industrial Mall means a building or a group of buildings designed, developed, owned and managed as a unit in which separate spaces are leased or occupied by permitted industrial uses. No more than 30 percent of the gross floor area of an industrial mall is used for accessory office or related commercial uses.

Conditions:

1. Required to submit a Comprehensive Development application (2.2.2 & 2.2.4)
2. Must meet Use Zone Site Development Standards or explain exceptions in the plan

4.4.12 Mineral Exploration

Definition: Mineral exploration refers to the search for mineral deposits. Mineral exploration ranges from hobby prospecting to advanced techniques such as trenching and diamond drilling. Mineral exploration activities may include traditional prospecting, geochemical sampling, airborne and ground-based geophysical surveys, line cutting, test pitting, stripping of bedrock, trenching, and diamond drilling, and may be accompanied by the creation of new (temporary) access trails, equipment laydown areas, campsites, or, less commonly, constructed access roads. For the purposes of municipal planning, exploration for quarry materials (e.g. sand, gravel) should be considered a form of mineral exploration and included in the definition of mineral exploration.

The Mineral Lands Division, Mines Branch, Department of Natural Resources, administers the *Mineral Act, 1990* under which mineral licences are issued and within the bounds of which mineral exploration may be approved by the issuance of an "exploration approval". Exploration approvals are generally issued for no longer than one year. Applications for exploration approval involving areas within a municipal planning area and where the activities proposed may involve ground disturbance, wildlife disturbance, water quality impairments, or foreseeable land use conflict, are referred to the municipality and terms and conditions to address any specific concerns are raised and addressed during the referral process;

Conditions:

1. Must meet Use Zone Site Development Standards;

Mineral exploration that does not meet the definition of 'Development'

2. Mineral exploration that does not meet the definition of 'Development' and does not involve appreciable ground disturbance, construction of access roads, or objectionable noise, odour or appearance, will be permitted anywhere in the Planning Area, provided that adequate notification is provided to Council. Mineral exploration that is not classed as development by virtue of little or no visible impact (e.g. prospecting, ground-based geophysical surveys, geochemical sampling surveys) should be allowed anywhere in the Planning area.

Mineral exploration which is classed as 'Development, may be permitted provided that:

- adequate provision is made for buffering and mitigation of potential impacts on adjacent zones; mineral exploration shall be subject to conditions that control noise, appearance, and other impacts that may arise, as well as the duration of the exploration program. The precise nature of these controls will depend upon the location of the mineral exploration in relation to built-up and environmentally sensitive areas, such as water supply areas, watercourses, and wetlands.
- Where there is to be ground disturbance, the developer shall provide a site restoration surety and/or other satisfactory guarantees of site landscaping to Council.

- Council will not issue a permit for mineral exploration until all necessary permits and approvals have been obtained from the Departments of Natural Resources, Government Services, and Environment and Conservation, and any other relevant Provincial agency.
- Basic environmental requirements for mineral exploration are already set out in the Mineral Regulations under the *Mineral Act, 1990* for example, that all excavated, stripped, and grubbed sites be rehabilitated by backfilling or re-contouring, as appropriate, and then placing stockpiled organic materials back over the site. The Mineral Lands Division conducts inspections year-round to ensure that the Mineral Regulations and the terms and conditions of exploration approvals are adhered to, including that rehabilitation, once due, is completed as required.
- Should a town have concerns about any mineral exploration activity, whether before or after the issuance of an exploration approval from the Department of Natural Resources to conduct the work, the town should contact the Mines Branch, Mineral Lands Division in order to have the concerns addressed. Exploration for quarry materials (e.g. sand, gravel) is permitted using the same procedure and typically involves the excavation of test pits followed by their immediate rehabilitation.

Mineral exploration associated with mineral licenses (or mining leases or impost lands) whose issuance date is earlier than a zoning or other planning decision which restricts or disallows mineral exploration should be considered a non-conforming use as per section 108 of the *Urban and Rural Planning Act, 2000* and allowed to continue accordingly.

According to the Mineral Lands Branch, mineral exploration that is classed as development should be at least a discretionary use in all zones, provided that the work is subject to conditions appropriate to the use zone and which address any other concerns specific to the location.

4.4.13 Mineral Working

Definition: Mineral Working means land or buildings used for the working, stockpiling or extraction of quarry materials as defined under the *Quarry Materials Act, 1998*, including peat extraction.

Conditions

1. For approved developments where the extraction of quarry materials is occurring or may be expected occur, the Town shall send a copy of the development permit to the Mineral Lands Division, Department of Natural Resources. Note that quarry materials include but are not limited to aggregate, fill, rock, stone, gravel, sand, clay, borrow material, topsoil, overburden, subsoil, peat.
2. Council shall be satisfied that the mineral working areas will not create a nuisance and will not adversely affect the amenity of the specified development or natural feature, no mineral working shall be located closer than the minimum distances set out below to the specified development or natural feature:

Minimum Distance of Pit and Quarry Workings FROM:

(a) Existing or proposed Residential Development:
- where no blasting is involved 300 metres
- where blasting is involved 1000 metres

(b) Any other developed area or area likely to be developed during the life of the pit or quarry working 150 metres
(c) Public highway or street.....50 metres
(d) Protected Road..... ....90 metres
(e) Waterbody or watercourse.....50 metres

Note: where a minimum required distance was originally observed when choosing the location of the quarry, quarrying should not be discontinued or impeded where the buffer is reduced to less than the required distance due to encroachment of development towards the quarry.

The quarry buffer is required by the Mineral Lands Division, Mines Branch, Department of Natural Resources as a means to ensure that encroaching development does not create conflict between the new uses and the existing mineral working activities. Conversely, new quarries will also be located so as to minimize potential conflict with adjacent land uses. Note that a reduction in the mineral working buffer shall not impact continuation of the mineral working.

3. A mineral working shall be screened in the following manner where it is visible from a public street or highway, developed area, or area likely to be developed during the life of the use:
   a. Where tree screens exist between the mineral working and adjacent public highways and streets or other land uses (excepting forestry and agriculture), the tree screens shall be retained in a 30-metre wide strip of vegetation so that visibility of any part of the use from the surrounding uses or streets will be prevented. The tree screens must be maintained by the owner or occupier of the use to retain 30 metres in a forested appearance. Where vegetation dies or is removed from the 30-metre strip, Council may require new trees of a minimum height of 1 metre be planted to fill in the areas affected to the satisfaction of Council.
   b. Where no tree screens exist of sufficient width and density to constitute a visual screen, earthen berms shall be constructed to a height sufficient to prevent visibility of any part of the mineral working from adjacent uses (excepting forestry and agriculture), or adjacent public highways and streets. The berms shall be landscaped to Council's satisfaction.
   c. Where natural topography creates a visual screen between mineral workings and adjacent public highways and streets or other land uses (excepting forestry and agriculture), additional screening may not be required.

d. Where effective screening for any mineral working or associated processing or manufacturing use cannot be installed or located as required in (a) - (c) above, Council may refuse to permit the use or associated activity.
e. Council may require the mineral working site or excavated areas of a pit or quarry working to be enclosed by a fence designed and constructed to its specifications and no less than 1.8 metres in height.
f. Effective tree screens shall be maintained around the periphery of any mineral working. Where trees are not present to create an effective screen, Council may require the installation of a landscaped embankment or fence.

4. Topsoil removed for mineral working shall be retained for restoration of the site.
5. No mineral working shall be conducted which causes danger or nuisance to the public.
6. No mineral working shall be permitted within the view of a designated scenic road.
7. Proposed mineral working operations will be evaluated carefully by Council in conjunction with the Department of Natural Resources.
8. No mineral working shall unacceptably reduce the quality of water in a watercourse or waterbody. Any access road which crosses a watercourse shall have a bridge or culvert according to the regulations of the Department of Environment and Conservation.
9. No mineral working shall result in the excavation of land below the level of the water table nor cause the ponding of water. However, settling ponds may be permitted with the approval of the Department of Environment and Conservation.
10. No mineral working shall be carried out in a manner which causes the erosion of adjacent land.
11. The mineral working shall be kept clean of refuse, abandoned vehicles and equipment, and derelict buildings.
12. Upon completion of mineral working, and when there is no intention to re-open such operations, all buildings and machinery shall be removed from the site and the site restored so as not to constitute a danger to the public or present an unsightly appearance.
13. No mineral working or associated drainage shall unacceptably reduce the quality of water in any waterbody or watercourse. Any access road to a pit or quarry working which crosses a brook or stream shall be bridged or have a culvert at the crossing, in accordance with the Regulations of the Department of Environment and Conservation.
14. No mineral working or associated storm or sanitary drainage shall unacceptably reduce the quality of water in any waterbody or watercourse. Any access road to a pit or quarry working which crosses a brook or stream shall be bridged or have a culvert at the crossing, in accordance with the Regulations of the Department of Environment and Conservation.
15. No mineral working shall be carried out in a manner so as to cause erosion of adjacent land.
16. The mineral working shall be kept clean of refuse, abandoned vehicles, and abandoned equipment and any derelict buildings.
17. During extended periods of shutdown, access roads to a mineral working shall be ditched or barred to the satisfaction of Council.
18. All stumps, organic material and topsoil, including the rusty coloured and iron stained layer, shall be stripped and stockpiled at least 5 metres from active quarry or stockpile areas. The owner or operator shall ensure that the quality of the topsoil is not affected by dilution with other materials.

19. Upon completion of the mineral working, the following work shall be carried out by the operation:
    a. All buildings, machinery and equipment shall be removed.
    b. All pit and quarry slopes shall be graded to slopes less than 20° or to the slope conforming to that existing prior to the mineral working.
    c. Topsoil and any organic materials shall be re-spread over the entire quarried area.
    d. The access road to the working shall be ditched or barred to the satisfaction of Council.
20. If the mineral working contains reserves of material sufficient to support further extraction operations, Council may require the work described above to be carried out only in areas of the site where extraction has depleted aggregate reserves.
21. The following conditions shall apply to a Mineral Working which is subject to a Department of Natural Resources Quarry Permit or which is proposed for a duration of less than five years. Council may require an applicant for a development permit under this condition to meet the stipulations set out in condition 18 below, if Council determines that the size of the parcel or of the proposed mineral working, or the size of the aggregate resource in the surrounding area is sufficiently large or the duration is sufficiently long to warrant the application of condition 18.
22. An application for a development permit for the proposed Mineral Working use shall be accompanied by a detailed sketch or sketches satisfactory to Council which shall show the location of physical site features and extraction and processing features required by Council, including but not limited to:
    a. the general area of the location of the mineral working;
    b. boundaries of the parcel to be mined (i.e. land covered by the development application);
    c. extent of the site area to be mined;
    d. roads, parking and loading areas and entrance and exit to the site;
    e. waterbodies within the boundaries;
    f. waterbodies within 250 metre radii of the boundary;
    g. channels or ponds to be removed, shifted and created; and
    h. the location of any building or structure and equipment which will be located on the site.
23. Upon completion of the mineral working operations on the site, the developer shall meet the conditions set out above and any other condition(s) stated in the development permit that Council deems necessary for restoration of the site.
24. A temporary development permit may be issued for a maximum of one year and may not be renewed after five consecutive years. Upon expiry of the development permit Council shall inspect the site to confirm compliance with the development permit and development regulations.

Long-term Mineral Workings

The following conditions shall apply to a Mineral Working subject to a Department of Natural Resources Quarry Lease or of a duration of 5 years or greater.

1. An application for a development permit shall include a Mineral Working Development Plan satisfactory to the Council for the proposed Mineral Working use, which shall include a development application showing the location of physical site features and extraction and processing features required by the Council including but not limited to:

- boundaries of the parcel to be mined;
- extent of site area(s) to be mined;
- buildings and structures on the site;
- roads, parking and loading areas and entrance and exit to the site;
- fences, berms and landscaping provided for screening;
- waterbodies and channels to be removed, shifted and created;
- location and expected maximum height of stockpiles of mined ores, sand and gravel;
- location of major machinery and conveyors for receiving and processing raw ores including machinery for sifting, washing and grading ores, and the manufacturing of concrete and stone products;
- the probable location of storage piles of topsoil and overburden removed from earlier phases of mined areas and temporarily being stored for replacement under the Reclamation plan; and

An application shall include a Mineral Working Reclamation Plan satisfactory to Council for the proposed mineral working use which shall explain, illustrate and show to the satisfaction of Council a plan for restoration of the site which includes final ground contours, slopes, depth of topsoil, and vegetation and a phasing plan if necessary, in the form of a grading and landscape plan or plans.

4.4.14 Natural Resource Use

Definition: Natural Resource Use means the use of land or buildings for the production and harvesting or extraction of natural resources such as, agriculture, forestry, fisheries us or mineral working activities.

Conditions:

1. Required to submit the equivalent of an 'Comprehensive Development application (2.2.2 & 2.2.4)' which in could consist of a Farm Business Plan for agriculture proposals, Forestry Management and annual operating plans for forestry, a proposal for aquaculture, the detailed quarry permit submission including operation and rehabilitation plans for mineral working activities; and, the Environmental registration documents of each as required under the Environmental Assessment Regulations;
2. Must meet Use Zone Site Development Conditions;

4.4.15 Natural Resource-Related industrial uses

Definition: means the use of land or buildings for any commercial or industrial development directly associated with, or requiring proximity to, farm operation, fisheries, forestry or mineral working industries; for example, processing of meat, fish and poultry products, feed mills, sawmills, planning mills, shingle mill products industries, asphalt plant, gravel crushing operation sand may include such uses as animal husbandry services, produce or grain storage/processing facilities, farm machinery service outlets, feed and seed warehouse (and associated retail outlets), including a nursery or garden centre.

Conditions:

1. Must meet Use Zone Site Development Standards;

4.3.16 Salvage/Scrap Yard

Definition: Salvage/Scrap Yard means an area of land or lot including any building or structure used for the receipt, storage, sale, re-sale and processing of waste or surplus automobile, transportation vehicles or industrial equipment, including any parts or pieces that have been removed, but does not include a solid waste recycling/disposal and composting site.

Conditions:

1. Required to submit a Comprehensive Development application (2.2.2 & 2.2.4)
2. Must meet Use Zone Site Development Standards
3. A scrap yard or solid waste storage or disposal site shall be screened in the following manner where it is visible from a public street or highway, developed area, or area likely to be developed during the life of the use:
4. Where tree screens exist between the use and adjacent public highways and streets or other land uses (excepting forestry and agriculture), the tree screens shall be retained in a 30-metre-wide strip of vegetation so that visibility of any part of the use from the surrounding uses or streets will be prevented. The tree screens must be maintained by the owner or occupier of the use to retain 30 metres in a forested appearance.
5. Where vegetation dies or is removed from the 30 metre strip, the Council may require new trees of a minimum height of 1 metre be planted to fill in the areas affected to the satisfaction of the Council or, at the discretion of the Council, where no tree screens exist of sufficient width and density to constitute a visual screen, earthen berm shall be constructed to a height sufficient to prevent visibility of any part of the use from adjacent uses (exception forestry and agriculture) or adjacent public highways and streets. The berm shall be landscaped to the Council's satisfaction.
6. Unless the Council is satisfied that the use will not create a nuisance and will not adversely affect the amenity of the specified development or natural feature, no scrap yard or solid waste storage or disposal site shall be located closer than the minimum distances set out below to the specified development or natural features:

4.4.17 Solid Waste Recycling/Disposal and Composting Site

Definition: Solid Waste Recycling/Disposal and Composting Site means a waste disposal site as defined by the guidelines established under the *Environmental Protection Act, 2002,* such as waste transfer stations, composting or recycling.

Conditions:

1. Must meet Use Zone Site Development Standards;
2. A vegetated or landscaped buffer zone of at least 15 metres around the perimeter of the use, in order to minimize any potential nuisance associated with noise, dust, or odors, or any objections based on visual aesthetics is provided;
3. There is adequate availability of utilities, including water, sewer, and electricity to provide water for firefighting and wash down of floors, electrical power for machinery and lighting, and for staff amenities;
4. The volume of material to be handled and/or stored is provided and the facility designed with sufficient to handle peak material volumes;

5. Measures to prevent storm water and runoff from contacting waste materials will be required and all waste containers used shall be leak proof, or provide for the collection and treatment of contaminated water and other liquids. Proper disposal of contaminated water shall be ensured;
6. Fencing shall be provided around the perimeter of the site, with a lockable gate at any entrance point. The type of fencing may vary with the natural site features;
7. Containers intended to receive organic waste will be required to have lids, screens, or covers that will prevent access by bears and other predators, rodents, and birds, or be placed inside predator-proof enclosures;
8. Where organic wastes are involved, buildings shall be specifically designed to prevent infestation by rats and other small mammals, and to be predator-proof.
9. If the solid waste recycling/disposal or composting site is visible from a public street or highway or a developed area, then the visual buffer is required to a height sufficient to prevent visibility.
10. A Waste Disposal referral buffer will be indicated as an overlay on the Land Use zoning map where new applications shall be referred to the Waste Management Division of the Department of Municipal Affairs and Environment for comment and recommendations.

4.4.18 Petroleum Exploration

Definition: means the activities undertaken to find sources of petroleum (as defined below from the *Petroleum and Natural Gas Act, 1990* and "petroleum", in addition to its ordinary meaning, includes oil and gas; which are defined as follows:

- "oil" means, (i) crude petroleum regardless of gravity produced at a well head in liquid form, and (ii) other hydrocarbons, except coal and gas, and hydrocarbons that may be extracted or recovered from deposits of oil sand, bitumen, bituminous sand, oil shale or from other types of deposits on the seabed or subsoil of the offshore area;
- "gas" means natural gas and includes substances, other than oil, that are produced in association with natural gas;

Conditions:

1. In recognition of the Town of Pasadena's objectives to retain local quality of life, the community's natural ambiance and the small-town sense of place, future petroleum oil and gas exploration activities shall be limited to the Rural zone.

2. Petroleum exploration activities that are of a magnitude to meet the definition of a development under the *Urban and Rural Planning Act, 2000* must have a permit.

4.5 CONSERVATION

4.5.1 Environmental Protection Area

Definition: Environmental Protection Area means areas where development is restricted due to the natural features of the site for purposes of conservation or protection of habitat, wetlands, resource

management, viewscapes or other special designations under legislation; or site unsuitability due to erosion control, steep slopes, flood control and water supply protection.

Conditions:

1. Must meet Use Zone Site Development Standards;
2. Nothing in these Regulations shall prevent the designation of environmental protection areas in any zone.
3. Council will not permit development vulnerable to flooding in areas known to be subject to local flooding.

4.5.2 Open Space, Parks and Trails

Definition: 'Opens Space, Parks and Trails' means a generally undeveloped space or environmentally sensitive areas maintained for the preservation of wildlife and the environment where the quality of the environment and naturalness of an area is the focus of the recreational experience; activities and development are limited to trails, picnic areas, playgrounds.

Conditions:

1. Must meet Use Zone Site Development Standards;
2. Nothing in these Regulations shall prevent the designation of parks and playgrounds in any zones provided that such parks and playgrounds are not located in areas which may be hazardous to their use and are not operated for commercial purposes.
3. Parks and playgrounds may be located on backland but shall have at least one 5-metre wide vehicular access directly onto a public street.

4.6 PUBLIC AND INSTITUTIONAL

4.6.1 Cemetery

Definition: Cemetery means a facility or land area reserved and dedicated to the burial of the dead and includes a columbarium, mausoleum, mortuary and related maintenance facility. A discretionary accessory use might include a crematorium (a facility containing a certified furnace or similar device intended for use in the incineration of human or animal corpses) subject to conditions.

Conditions:

1. A landscape plan should be submitted as part of the Development Application. The landscape plan shall illustrate areas of landscaping in relation to the burial plots and shall identify the location and types of plant species that are to be planted.
2. A minimum six metre (6 m) wide buffer shall be maintained between any lot line of the cemetery and areas designated for burial purposes and, within this buffer, trees and shrubs are to be planted to provide a landscaped screen between the cemetery uses and abutting properties.
3. A fence shall be constructed and erected along all lines of the cemetery
4. A cemetery use shall receive the approval of the Provincial Departments of Health and Environment and Conservation and shall be developed in accordance with the conditions of these Departments.

5. A discretionary crematorium is subject to the following conditions:
    a. A buffer between the crematorium and a sensitive land use such as residential, day care, elementary or secondary school or higher intensity land use, may be required at the discretion of the Council based on the following guideline:
        i. The buffer between the crematorium structure within the cemetery to the lot line shared with residential or sensitive land use, such as elementary or secondary schools, daycare, shall be a minimum of 70 m unless there are extenuating physical characteristics of the site that would provide natural screening
        ii. The buffer between other resource uses shall be a minimum of 30 m but may be less if there are extenuating physical characteristics of the site that would provide natural screening;
    b. All crematory facilities shall be located within an enclosed building that meets building and fire code requirements;
    c. All applicable local, provincial, and federal laws and regulations shall be met.

4.6.2 Institutional Use

Definition: Institutional Use means the use of land or buildings for public purposes, whether publicly or privately funded, where people may gather in larger numbers to access a regional or a municipal-wide or regional service, including but not limited to:

- Hospitals;
- Government Offices;
- Educational Facilities;
- Convention Centres or major cultural centres, such as provincial Arts and Culture Centres;
- Recreation Complex, such as an arena, multi-use sports and entertainment centres, swimming pools; and,
- Personal Care Facilities (larger than residential home), such as nursing or senior's homes, family and group care centres.

Conditions:

1. Required to submit a Comprehensive Development application (2.2.2 & 2.2.4)
2. Must meet Use Zone Site Development Standards

4.6.2.1 Personal Care Facilities - Non-Residential (Nursing Homes, and Family and Group Homes/Care Centres)

Subject to the following standards:

1. The development will be treated as a comprehensive development as set out in Part II of these Regulations, except that the minimum dwelling floor areas, building line setbacks and yards shall be as determined by Council.
2. The development shall be tailored to the needs of the persons occupying the development in accordance with their condition.
3. The overall design of the development – including road layout, landscaping, building design and location, parking areas, and so forth – will be attractive and compatible with other uses in the vicinity.

4. A single management authority shall be responsible for the maintenance of properties within the development.
5. Building types can be as necessary to serve the purposes of the development, including a variety of dwelling types, care facilities, and communal facilities such as storage rooms, hobby rooms, workshops, and garages.
6. Adequate noise separation shall be maintained between the use and adjoining dwelling units in an apartment building,
7. Adequate noise separation shall be maintained between the use and adjoining commercial uses,
8. A fire exit for the exclusive use of the facility use shall be provided,
9. A separate entrance for the exclusive use of the facility use shall be provided unless the entrance to the use from a common lobby or foyer is immediately adjacent to such lobby or foyer,
10. Parking as required in these Regulations shall be provided and reserved for the exclusive use of the facility use and identified as such on the parking lot,
11. A minimum of five square metres (5 m^2) of net floor space per person shall be provided for use by the facility users, this aggregate floor space shall be utilized for the purpose of group amenity areas and individual rest areas.

4.6.3 Protective and Emergency Services

Definition: Protective and Emergency Services means a development which is required for the public protection of persons and property from injury, harm or damage together with the incidental storage of equipment and vehicles, which is necessary for the local distribution of utility services. Typical uses include police stations, fire stations and ancillary training facilities.

Conditions:
1. Must meet Use Zone Site Development Standards;
2. Appropriate noise and separation measures shall be incorporated into the development to reduce noise impact on surrounding properties.

4.6.4 Public Gathering Places -Indoor

Definition: Public Gathering Places -Indoor means a building or part thereof designed and equipped to be used for public gatherings for entertainment, religious (place of worship), cultural, civic, educational, charitable, philanthropic or social purposes and may include a movie theatre, playhouse, museum, art gallery, place of worship, funeral home, community or cultural centre, library. These are smaller than regional institutional uses, like a hospital or college campus, as the patrons generally are not such a broad segment of society and therefore does not create the same level of activity in terms on onsite use and traffic.

Conditions:
1. Required to submit a Comprehensive Development application (2.2.2 & 2.2.4)
2. Must meet Use Zone Site Development Standards or explain exceptions in the plan;
3. Appropriate noise and separation measures shall be incorporated into the development to reduce noise impact on surrounding properties;

4. Where permitted as a discretionary use, a place of worship and an educational use shall conform to the frontage, building line setback, side yard, rear yard, lot coverage and height requirement specified for a detached dwelling.
5. Crematory facilities may be associated with a funeral home, subject to meeting the following conditions:
    a. A buffer between the crematorium and a sensitive land use, such as residential, day care, school or higher intensity land use, may be required at the discretion of the Council based on the following guideline, that the buffer be a minimum of 70 m from a residential or sensitive land use, such as elementary or secondary schools, daycare unless there are extenuating physical characteristics of the site that would provide natural screening;
    b. All crematory facilities shall be located within an enclosed building that meets building and fire code requirements;
    c. All applicable local, provincial, and federal laws and regulations shall be met.

4.6.5 Public Gathering Places - Outdoor

Definition: Public Gathering Places - Outdoor means an open-air assembly use requiring the minimum of permanent facilities, in the form of or similar to an outdoor worship service, and informal outdoor recreation, such as a picnic or barbecue area, playground and walking or jogging trails; but does not include a sport and recreation facilities or a recreation complex.

Conditions:

1. Required to submit a Comprehensive Development application (2.2.2 & 2.2.4)
2. Must meet Use Zone Site Development Standards;
3. Appropriate noise and separation measures shall be incorporated into the development to reduce noise impact on surrounding properties;
4. The use shall not negatively impact upon the main or primary use of the property and its associated activities such that the combined uses create a public safety or health concern or inconvenience.
5. The use shall not be permitted in close proximity to a residential area where, in the opinion of Council, the use or its associated activities will create a nuisance, such as the generation of fumes, noise, vibration, litter, and lighting, affecting the nearby residential area.
6. Where it is determined by Council, for public safety and convenience, that fencing is required; the area of the use shall be fenced in accordance with the requirements of Council;
7. Where it is determined by Council that washroom facilities are required, the use shall be required to provide washroom facilities in accordance with the requirements of the Provincial Department of Health and Council;
8. Where it is determined by Council, a security deposit will be required to be submitted to the Town for the cleanup of the site and surrounding area of litter and debris which is generated by the activities or the use. The security deposit shall be returned upon the site and surrounding properties being left in a clean state that is satisfactory to Council.

4.6.6 Sports and Recreation Facilities

Definition: Sports and Recreation Facilities means land and a building, structure or part thereof, designed and equipped to be used for athletic and leisure activities, and may include a health and fitness centre, bowling alley, curling rink; tennis, squash, handball and badminton courts; sports fields, outdoor tennis courts, unenclosed ice surfaces or rinks, athletic fields, boating facilities and Informal outdoor recreation, such as a cycles track, and walking or jogging track; but does not include a recreation complex but may include Public Gathering – Outdoor uses.

Conditions:

1. Must meet Use Zone Site Development Standards;
2. Appropriate noise and separation measures shall be incorporated into the development to reduce noise impact on surrounding properties;
3. Their environmental impact within the site can be contained and minimized;
4. The activity is not unduly detrimental to the wider amenity of the area; and,
5. The activity does not have a detrimental effect on neighbouring land uses or amenities.

4.7 RESIDENTIAL LAND USE CLASS

General Conditions

1. The front wall of a dwelling shall face the street on which it is located and shall have a civic number easily visible for fire and emergency services (see 6.1.2).
2. All residential structures shall have frontage on a publicly maintained road. (refer to Provision 4.1.1 for additional details).
3. All infill residential, duplex, medium and higher density residential proposals are to recognize the existing, established neighbourhood character and that new development is to blend in well with the built form of the neighbourhood. In some instances, Council may determine through a rezoning process for a higher intensity of residential use that the proposal is not the right location and the appropriate fit for the neighbourhood, and the rezoning may be denied.

4. *Residential Stairwells and Stairwell Enclosure-Exterior*
   a. An open stairwell enclosure shall not be permitted in a side yard unless the stairwell meets the minimum side yard setback requirement.
   b. In the case of an existing side yard stairwell, Council shall permit the enclosure of the stairwell subject to the following requirements:
      i. the enclosed stairwell is no closer than one decimal two metres (1.2 m) to the side lot line,
      ii. the enclosed stairwell is not located within a utility easement, and
      iii. the stairwell does not direct water onto the abutting property.

   c. An enclosed stairwell may be permitted closer than one decimal two metres (1.2 m) to the side lot line subject to the following requirements:
      i. the stairwell is not located within a utility easement; and

i. the abutting property owner provides a certified copy of an easement agreement (registered at the Registry of Deeds) to allow access to perform maintenance on the structure.

5. Residential Patios, Decks, Balconies, and Verandas Patios
   a. A patio shall meet the following development standards:
      i. minimum front yard setback: six metres (6 m) provided the patio does not encroach upon or reduce the number of off-street parking spaces required for the residential use;
      ii. minimum side yard: one decimal two metres (1.2 m);
      iii. minimum rear yard depth: one decimal two metres (1.2 m);
      iv. maximum height: at ground level or up to a maximum of zero decimal six metres (0.6 m) above ground level;
      v. if a roof is constructed as part of the patio or deck, or the patio or deck and the roof are attached to the building, the patio or deck will be considered an extension to the building; the roof will be complimentary to the dwelling to which it is attached and will be designed in a manner that is sensitive to surrounding properties; and the maximum height of the roof over the patio or deck shall be 3.1 m; and,
   b. Council may permit at its discretion permit the erection of a patio in the minor side yard that is bordering onto a flanking street with an adjacent Town owned Open Space intended for snow storage purpose.

A deck shall meet the following development standards:

i. a deck is not permitted in a front yard;
ii. minimum side yard: one decimal two metres (1.2 m);
iii. minimum rear yard depth: six metres (6 m) unless otherwise determined by Council; maximum height: greater than zero decimal six metres (0.6 m) above the established grade and up to but not higher than the first storey of the dwelling; and,
iv. if a roof is constructed as part of the patio or deck, or the patio or deck and the roof are attached to the building, the patio or deck will be considered an extension to the building; the roof will be complimentary to the dwelling to which it is attached and will be designed in a manner that is sensitive to surrounding properties; and the maximum height of the roof over the patio or deck shall be 3.1 m.

A balcony shall meet the following development standards:

i. a balcony is not permitted within the building line setback;
ii. minimum side yard width: two metres (2 m);
iii. minimum rear yard depth: six metres (6 m); and
iv. a balcony shall not extend beyond a maximum projection of two metres (2 m) into any yard.

A veranda shall meet the following development standards:

i. minimum side yard width: two metres (2 m); and
ii. a veranda shall not extend beyond a maximum projection of one decimal five metres (1.5 m) into any yard.

6. Residential Wheelchair Ramp Wheelchair Ramps

a. A wheelchair ramp must be built to the Building Code of Canada standards (Section 3.8.3.4);
b. Minimum side yard setback: zero decimal three metres (0.3 m) unless the ramp is being built adjacent to a boundary that abuts an open space Town-owned property where the side yard setback is zero metres (0 m);
c. Every effort must be made to construct a wheelchair ramp such that it runs adjacent to the dwelling that it provides access to, rather than extend at an angle away from the dwelling face.
d. At its discretion, Council may, after consulting with abutting property owners, permit an access ramp for a wheel chair to be erected outside the minimum setback of the front yard, side yard, or rear yard of a lot if:

1. There is no alternative means to provide the access ramp, and
2. The ramp does not create a safety hazard or block sight lines.

c. An access ramp or open deck is not deemed to be part of the building when calculating lot coverage for the purposes of the Use Zone Table.

d. At its discretion, in order to accommodate the mobility needs of disabled and elderly persons, Council may require higher or special standards or provisions in the design and construction of streets, sidewalks, parking areas, building entrances, building internal spaces, parks, trails, playgrounds, recreational sites and facilities, and public spaces.

7. Minor Front Yard Projections on a Residential Lot
   a. No portion of a dwelling shall project into the minimum building line setback except for the following circumstances and in accordance with the following provisions. The following projections shall be permitted:
      i. chimney breast, eaves, sills or cornices not projecting more than one metre (1 m) into a required front yard depth;
      ii. unenclosed steps with or without a landing;
      iii. an unenclosed or enclosed porch that projects no more than two metres (2 m) into the required front yard depth or beyond the established building line for the lot;
      iv. a patio or veranda in accordance with the conditions as outlined in the specific Use Zone; and
      v. wheelchair ramps or other accessibility devises as approved by Council.

   b. The projection does not encroach upon or reduce the minimum amount of parking required for the lot;
   c. The projection does not encroach upon or create an obstruction in the sight triangle for corner lots; and,
   d. Council may permit the projection to exceed beyond two metres (2 m) into the building line setback if it is the view of Council that the projection does not negatively impact the sight lines or streetscape of the residential street, does not create obstructed views for adjacent or nearby residential properties, and the projection is architecturally and aesthetically compatible with the dwelling to which it is attached:
   e. The projection does not encroach upon or reduce the minimum amount of parking required for the lot;

f. The projection does not encroach upon or create an obstruction in the sight triangle for corner lots;

4.7.1. Detached Dwellings

Definition: Detached dwelling means a dwelling containing one main dwelling unit which has a private entrance, and which is not attached to another dwelling; and, does not include mobile homes or recreational vehicles, but does include mini-homes; but it may contain a subsidiary apartment.

Condition:

1. Must meet Use Zone Site Development Standards

4.7.2 Semi-Detached Dwelling

Definition: Residential Dwelling- Semi-Detached (Double) means a building containing two dwelling units, where each dwelling unit has a private entrance as compared to apartment buildings with a common entrance, where the units can be placed one above the other, or side by side, but does not include a detached dwelling containing a subsidiary apartment.

Condition:

1. Must meet Use Zone Site Development Standards.

4.7.3 Townhouses

Definition: Residential Townhouses means three or more dwelling units in one building, each unit separated vertically from the others, each of which must have an independent entrance to a front and rear or side yard; and each unit may be located on a separate lot.

Conditions:

1. Must meet Use Zone Site Development Standards;
2. Required to submit a Comprehensive Development application (2.2.2 & 2.2.4);
3. Medium Density residential development applicants are to provide building rendering information to the Town to identify architectural intent of the proposed development. Building design attention to front entrances, windows and design treatment, facades, rooflines, massing and avoidance of large blank and repetitive design walls, quality of building materials and strong individual unit identity will be required.

4.7.4 Mini-Home and Mobile Homes

Definitions:

- **MINI-HOME:** Mini-Home means a sectional prefabricated dwelling designed for transportation after fabrication to a site, typically transported by means of flat-bed trucks, and coupled together mechanically and electrically to form a single structure situated on a concrete foundation, either a full basement or crawlspace, but does not include a mobile home. Mini homes do not have axles or a chassis. To differential between a mini-home and a modular home, the shape of a mini-home is

similar to a mobile home with a rectangular shape, whereas a modular home is of varied architectural features and styles which is 'ready-to-assemble' on-site and are indistinguishable from a home built on-site.

- **MOBILE HOME:** Mobile Home means a transportable factory-built detached dwelling:(a) which complies with space standards substantially equal to those laid down in the Canadian Code for Residential Construction and is in accordance with the construction standards laid down and all other applicable provincial and;(b) which is designed to be transported on its own wheels and chassis to a mobile home lot, and subsequently supported on its own wheels, jacks, posts or piers, or on a permanent foundation and connected to exterior public utilities , in order to be suitable for year round term occupancy.

Types of Mobile Home or Mini Home developments:

- **Mobile Home or Mini Home Park:** means a development under single or joint ownership, cared for and controlled by an operator where individual mobile or mini home lots are rented or leased with or without units placed on them and where ownership and responsibility for the maintenance and development of site facilities including underground services, access roads, communal areas, snow clearing and garbage collection, or any of the, are the responsibility of park management. It does not travel trailer park, campground or group dwellings.
- **Mobile Home or Mini-Home Subdivision:** means a development requiring the subdivision of land whether in single or joint ownership into two or more pieces or parcels of land for the purpose of mobile home or mini-home lots and where the maintenance of streets and services is the responsibility of a municipality or public authority. A mobile home may not be located within a mini home subdivision; however, a mini home may be located within a mobile home subdivision.

Conditions:

1. A mobile home must be located within a mobile home subdivision;
2. A mobile/mini home subdivision/park is required to submit a Comprehensive Development application (2.2.2 & 2.2.4).

4.7.5 Apartment Building

Definition: Apartment Building means a building containing three or more dwelling units which have a shared entrance and hallway, but does not include a row dwelling or a subsidiary apartment.

Conditions:

1. Must meet Use Zone Site Development Standards;
2. Required to submit a Comprehensive Development application (2.2.2 & 2.2.4);
3. Medium and Higher Density residential development applicants are to provide building rendering information to the Town to identify architectural intent of the proposed development. Building design attention to front entrances, windows and design treatment, facades, rooflines, massing and avoidance of large blank and repetitive design walls, quality of building materials and strong individual unit identity will be required;
4. Commercial uses may be permitted in multiple-unit apartment buildings where:
   a. The proposed use is located on the ground floor of the apartment building;
   b. The commercial use will serve local needs of the residents and surrounding neighbourhood; and,

c. The use will not detract from the residential character of the neighbourhood by virtue of generating excessive noise or traffic.

4.7.6 Cottage

Definition: Cottage means a dwelling unit designed or intended for seasonal or recreational use and is not intended for use as permanent living quarters, and does not include a vehicle as defined under the *Highway Traffic Act, 1990*.

Conditions:

1. Must meet Use Zone Site Development Standards;
2. Must meet building requirements under these Development Regulations, including the National Building Code, etc.
3. Remote or accessible (recreational) cottages will not be eligible for municipal services if such service would be a burden to taxpayers;
4. A home in a residential area, used as a seasonal residence, must be maintained to the standard of the neighbourhood as a full-time residence;
5. Recreational cottages with road access (usually a resource road) allocated on Crown land should preferably be located within a designated cottage development area by the Lands Branch, Government of Newfoundland and Labrador.
6. Recreational cottages shall not have private access onto Class 1, 2 and 3 Protected Roads unless they are located within a designated cottage development area by the Lands Branch, Government of Newfoundland and Labrador.

4.7.7 Personal Care Home -Residential (including Group Home and Treatment facilities)

Definition: A Personal Care Home – Residential is a ***detached dwelling*** used for children, young people or adults who cannot live with their families, such as people with chronic disabilities or people with dementia, or simply seniors who can no longer live alone, but wish to live in a home setting rather than an institution. This includes special needs housing in the form of treatment facilities, such as drug dependency residential programs for youth or alcohol recovery treatment for adults as well as youth. No more than five residents are allowed.

Conditions:

1. Must meet Use Zone Site Development Standards;
2. A personal care or group home is permitted in a dwelling unit that is adequate in size to accommodate the number of persons living in the group, inclusive of staff.
3. The use and appearance of the dwelling shall not materially differ from, or adversely affect, the amenities of adjacent dwellings or the neighbourhood.
4. Council may require special access and safety features to be provided for the occupants before occupancy is permitted.
5. There must be at least one trained caregiver there 24 hours a day;

4.7.8 Cluster Residential development

Definition: Cluster development consists of family-oriented housing on a large site, in the form of detached dwellings or semi-detached dwellings on individual lots or in the form of ground-oriented multiple unit residential buildings with substantial public open space set aside within the development site in accordance with a comprehensive development application. Cluster development shall only be considered if there are special amenities such as mature vegetation, watercourses, ravines, or other landscape or heritage features worthy of preservation, or the site can contribute open space to a park designated in the municipal plan, or the site is impacted by slopes or incompatible uses.

Conditions:

1. A comprehensive development application is required for a Cluster (Conservation) residential development – Refer to 3.1.2;
2. The minimum lot area for a Cluster development comprehensive development application shall be 2 hectares;
3. The designated Open Space lands may contain natural features such as a stream, ravine, stands of mature trees, or other land forms worthy of preservation, and/or contain heritage buildings or features, and/or contribute to a park designated in the municipal plan; and
4. Open Space areas must be accessible by the public from a public road;
5. A restrictive covenant will be put in place that prevents future rezoning of the Open Space lands that are part of the Cluster Residential Comprehensive Development application.

4.7.9 Home Business

Definition: General Home Business means a subsidiary use of a dwelling or associated accessory building for commercial use involving the provision or sale of goods and/or services without detracting from the residential character of the neighbourhood in terms of traffic, or any other nuisance. Examples may include:

1. Home office for professions, such as, an accountant, architect, auditor, engineer, realtor, insurance agent, planner, lawyer;
2. Personal service such as a hairdressing, tailor, photographer, pet groomer, caterer's establishment;
3. Care services, such as child care, or home-care; and similar occupations or businesses.
4. Artisan and other home crafts;
5. Food preparation for catering services and baking;
6. Bed and Breakfasts;
7. Music and dance lessons and educational tutoring;
8. Telephone and mail order business;
9. Art gallery and framing shop;
10. Pet grooming services;
11. Shoe repair, dressmaking, sewing repairs and tailor shop;
12. Furniture repair and upholstery;
13. Sale of bedding plants and trees grown on the same lot;

14. Various personal service uses that do not disrupt the residential character of the neighbourhood such as small appliance, clock/watch, bicycle, ski and snowboard and computer repair, locksmiths, manicurists and insurance agents; and,
15. Discretionary Uses as approved by the Authority.

Exclusions:

An accessory home-based business shall not include any business activity related to any of the following uses:

- Occupations that discharge or emit odors, noxious or toxic matter or vapors; heat, glare, noise and/or radiation;
- Manufacturing, welding or any other light industrial use;
- The salvage, repair, maintenance or sales of motor vehicles, or motor vehicle engines or parts;
- Tow truck operations;
- The use of mechanical or electrical equipment except as ordinarily utilized in purely domestic, household, recreational hobbies or a home office use;
- The use of any motor vehicle exceeding 4,500kg (9,920lbs.) licensed gross vehicle weight, or a commercial vehicle unless such vehicle is completely enclosed within a building;
- Materials and commodities that involve delivery to and from the home-based business residence in such bulk or quantity as to require regular or frequent delivery by a commercial vehicle or trailer;
- Business that result in traffic congestion, on street parking overflow, electrical interference, fire hazards or health hazards;
- Veterinary clinics, pet breeding and boarding kennels;
- Orchestra and band training;
- Office uses that generate regular daily visits by clients, as in a clinic;
- Public gathering use;
- Telephone or mail order sales of goods where customers enter the premises to inspect, purchase or take possession of goods;
- The sale of any commodity not produced on the premises, except for personal service-related products;
- Warehouse outlet;
- Contractors Yards;
- Realty office;
- Adult Entertainment Uses; and,
- Any other use that is not complimentary to the quiet enjoyment of a residential neighbourhood.

General Development Conditions for Home Businesses:

1. The home-based business must have an annual business license (with fee) from the Town;
2. Limiting the maximum square footage size of the home business operation to 25% of the total floor area of the principal residential home except for Day Care where the area will be at the discretion of Council;
3. The use is clearly subsidiary to the residential use, does not alter the character of the property or detract from the residential character of the neighbourhood. The external appearance of the

dwelling or accessory building shall not be changed by the home business and the business Is use to be entirely enclosed within a building.

4. Activities associated with the use are not hazardous, and are not a nuisance to the occupants of adjacent dwellings;
5. No regular parking of commercial vehicles or trailers except for one vehicle with a gross weight of no greater than one tonne will be permitted.
6. The residence is occupied by the operator of the home business.
7. There shall be no wholesale or outdoor storage of goods or equipment.
8. Any retail sales are incidental and subsidiary to the approved use.
9. The residential lot has sufficient area to accommodate the parking and loading requirements of the dwelling unit and the home business.
10. The only home businesses that can be conducted outside the dwelling or accessory building are Non-farm operation animal husbandry as defined under 'Agriculture – Urban' and Child Care.
11. A non-illuminated identification sign not exceeding zero decimal two square metres (0.2 m^2) in area shall be permitted provided that the sign is consistent with the residential character of the neighbourhood.
12. The home business use must be entirely enclosed within the building;
13. The home business will occupy:
    a. no more than twenty percent (25%) of the total floor area of the dwelling unit (except for day care which is at the discretion of Council), or
    b. no more than one hundred (100) square metres of the total floor area of an accessory building.
14. Council may require fencing, screening, and/or a minimum buffer to protect the amenity of adjacent uses.
15. The home business will not create traffic safety or traffic congestion concerns.
16. The home business will adhere to all other conditions that Council considers necessary to protect the amenity of adjacent uses and the neighbourhood.
17. The home business will not use water or generate sewage in excess of what can be accommodated by the municipal water supply and sewage system.

Development Conditions for Specific Home Businesses

4.7.9.1 Bed and Breakfast

Definition: Bed and breakfast, sometimes referred to as a hospitality home, means an owner-occupied or owner-managed dwelling for paid temporary accommodation with no more than four (4) guest rooms. The establishment may include a self-serving dining area for the use by overnight guests. Catered dining may be considered on a limited-use basis. Other uses that may be considered under this definition include hospitality home and inn. It does not include a hotel, motel or hostel.

Conditions:

1. The principal use of the residential dwelling unit shall continue to be the home for the ongoing occupation by a single family; no other use such as for a Residential Care or Boarding use shall be permitted at the same time as a Bed and Breakfast use;

2. The person(s) operating the Bed and Breakfast shall hold a valid license issued by the agency/ agencies having jurisdiction or authority, such as, Canada Select and the Tourism Division, Government of Newfoundland and Labrador;
3. No more than four bedrooms accommodating not more than two persons per room at any one time may be used by residential homes for a Bed and Breakfast use; however, for a residential property of a minimum of 0.4 hectares or more, additional rooms may be considered at the discretion of Council;
4. The maximum stay for any one patron shall be not more than 45 days in a 12-month period;
5. Bed and Breakfast amenities shall include a minimum of sleeping accommodation area per bedroom of 12.0 m^2 and full bathroom and washroom facilities with potable hot and cold water for each bedroom;
6. A Bed and Breakfast Use is not permitted within a subsidiary apartment, a mobile home or within multi-unit dwellings units.

4.7.9.2 Boarding House

Definition: Boarding house or lodging house means a detached dwelling in which at least rooms are regularly rented to 3 or more persons other than the immediate family of the owner or tenant. Guests are semi-permanent boarders/lodgers, whereas hotel guests are travelers and transient guests.

Conditions:

1. Must conform to Use Zone Table and General Standards for Home Businesses

4.7.9.3 Day Care: Residential

Definition: Day care or family and group care means a dwelling accommodating up to but no more than six (6) children or five (5) adult persons exclusive of family or staff receiving care in a home-like setting, for example, group homes, halfway house, child care, adult care (seniors) or disabled persons.

Conditions

1. The section of the street on which the use is located allows sufficient area and sight distance for the safe and convenient drop off and pick up of children without hindering the safety and convenience of vehicular and pedestrian traffic on the street, or the development provides adequate off-street drop off or pick up spaces satisfactory to Council;
2. the use is compatible with nearby uses; that is, the use of the dwelling does not materially differ from, nor adversely affect, the amenities of the adjacent residences, or the neighborhood in which it is located;
3. the use shall occupy a maximum of forty percent (40%) of the floor area of the dwelling unit;
4. the use shall have a maximum of six (6) adult day care users present at any time;
5. a minimum of five square metres (5 m^2) of net floor space per person shall be provided for use by adult day care users, this aggregate floor space shall be utilized for the purpose of group amenity areas and individual rest areas;
6. the operator of the day care shall maintain the dwelling in which the use is located as his/her primary residence;

7. the use shall operate only during the full daytime period between 7:00 a.m. and 7:00 p.m.
8. A family group care centre use is permitted in any dwelling or apartment that is adequate in size to accommodate the number of persons living in the group, inclusive of staff, provided that, in the opinion of Council;
9. Council may require special access and safety features to be provided for the occupants before occupancy is permitted.

4.7.9.4 Parking for Home Business

1. In addition to the two required parking spaces for a residential zone use, a Home-Based Business shall provide one additional parking space for each non-resident employee working at such facility;
2. The Home Base Business applicant shall provide a Development application that indicates the parking spaces location and any landscape improvements related thereto at time of business license application.

4.8 PUBLIC INFRASTRUCTURE AND UTILITIES

4.8.1 Communications

Definition: Communications means a television, radio, cell phone, or transmission tower or antenna, as well other communications transmitting or receiving building or infrastructure and includes wireless communications facilities, such as, infrastructure regulated by the federal government that enables wireless communications including broadcast antennas, cellular phone towers including private antenna systems for ham radio and citizen band radio, mounted on the ground or on another structure such as a rooftop.

Conditions:

Council may, within any zone, permit land or a building to be used in conjunction with telecommunications structures or antennas subject to the following standards:

1. Must meet Industry Canada standards
2. Where proposed telecommunication towers are less than 15.0m in height, and where the proposed tower poses no apparent or known significant and authenticated negative impact on adjacent lands, buildings and uses, they are to be integrated and installed in association with an existing structure or building such as on an existing utility pole or tower, or on the rooftop of a non-residential use building.
3. Must meet Use Zone Site Development Standards except as noted below;
    a. The height requirements may be waived in the case of communication masts and antennae, flagpoles, water towers, spires, belfries, or chimneys, but any such waiver which results in an increase of more than twenty percent (20%) in the permitted height of the structure shall only be authorized under the provisions of the Section of the Regulations dealing with Variances;

b. The telecommunications structure or antenna that does exceed the height requirements as outlined in Item 2 (above) shall meet the conditions as outlined in Item 5 (below);
c. Where the telecommunications structure or antenna exceeds the height requirements as outlined in Item 2 (above) or exceeds a height of fifteen metres (15 m), the antenna shall be processed as a discretionary use subject to the provisions of the Section of the Regulations dealing with Variances with notification to residents located within 0.5 km; these should preferably be located in the Rural and Industrial zones.;

4. Where Council permits a telecommunications structure or antenna, the telecommunications structure or antenna shall be subject to the following conditions
   - where it is deemed feasible, a new telecommunications structure or antenna will share existing telecommunications structure or antenna infrastructure or will modify or replace an existing telecommunications structure or antenna do not detract from the appearance and character of the surrounding properties;
   - the colour, location, and design of a new telecommunications structure or antenna will not detract from the appearance and character of the surrounding properties and do not negatively impact aesthetically on adjacent lands and uses; and,
   - the site or the building on which the telecommunications structure or antenna is erected or situated shall be landscaped or treated in such a manner to minimize the visual impact on the surrounding area.

4.8.2 Easement

Definition: Easement means the right to use land, most commonly for access to other property, or as a right-of-way for transportation or transmission corridor, utility service or emergency access.

Conditions:

1. No permanent building (including accessory buildings) shall be constructed over any known easement or emergency access, whether that easement has been assigned to the Town, a department of the provincial or federal government, or any utility company (i.e.: Nalcor, Newfoundland Power, telephone, cable television, Crown Land).
2. Where land is required for utility easements or emergency access, or other forms of legal limitation to the use of the land, or to protect and preserve specific natural or environmental features of the site, Council shall require that such land be obtained for the appropriate government department or agency, or private utility provider, in the course of consideration of approval of subdivision or other development applications.

4.8.3 Utilities

Definition: Utilities means a development that comprises a system or works used to provide one or more of the following for public consumption, benefit, convenience or use:

- water;
- sewage disposal;
- drainage;
- fuel;
- electric power;
- waste management;

- street lighting;
- telecommunications,

and includes minor buildings and the thing that is provided for public consumption, benefit, convenience or use but does not include a water treatment plant, sewage treatment plant, solid waste landfill, or power plant.

Conditions:

1. Required to submit a Comprehensive Development application (2.2.2 & 2.2.4)
2. Must meet Use Zone Site Development Standards
3. No adverse effect on adjacent land uses is created.
4. The size and appearance of such works must be in keeping with adjacent uses; and,
5. Provision shall be made for buffering in the form of landscaped areas between uses;

4.8.4 Transportation/Transmission Corridor

Definition: For the Town of Pasadena, the Transportation/Transmission Corridors consist of the Rights-of-Way for the Trans-Canada Highway, the Deer Lake Power Company, Corner Brook Pulp and Paper Company, and the Muskrat Falls hydro-electric transmission line, as identified by the zone.

Conditions:

1. No future or existing land or building developments that require new roadway access to the Trans-Canada Highway will be permitted.
2. No future or existing land or building developments will be permitted to locate within the transmission line corridor.
3. Accesses that pass under the transmission lines may be permitted through consultation and approval recommendations from Deer Lake Power Company Power, as the electric utility provider.

5.0 ACCESSORY USES & BUILDINGS

5.1 ACCESSORY USES

5.1.1 General Accessory Uses

Definition: Accessory Use (as set out in the *Ministers Development Regulations* under the *Urban and Rural Planning Act, 2000*): '...means a use that is subsidiary to a permitted or discretionary use and that is customarily expected to occur with the permitted or discretionary use...';

Examples of accessory or subsidiary uses to a primary use include, but are not limited to, the following:

1. facilities for the serving of food and alcoholic beverages in an arena or other public gathering place, adult day care, senior's residence, marina, or hotel;
2. childcare, catering, convenience and take-out food service maybe permitted as an accessory use to a recreational facility, provided that they are contained within the building envelope of the recreational building;
3. a gift or souvenir shop in a museum, hotel or other public institutional establishment;
4. an office, convenience store, or small catering establishment in a campground;
5. a dock, wharf, slip or stage associated with a permitted use; exception includes a storage building and workshop only if it does not detract from the nature of the neighbourhood;
6. a home business;
7. a residence only associated with a resource use, such as a farm house on an agriculture farm operation or associated with a 'live-work' industrial studio in a light industrial park/business;
8. a satellite dish or similar device attached to a building;
9. a wind generator, solar panel, radio antenna, or similar device;
10. an office or storage building associated with a commercial building;
11. urban agriculture, and,
12. a workshop or storage building dock associated with an industrial use.

General Conditions for all accessory uses:

1. Must conform to Use Zone Table in which the primary permitted use is located;
2. To preserve the character and livability of neighbourhood residential areas of Pasadena, no more than three accessory residential uses area allowed: subsidiary apartments (including granny suite) for a boarding use, a bed and breakfast use, a home-based business, a child care use, the keeping of backyard chickens and similar accessory uses of activity as defined by the Development Regulations, shall be permitted at any one residential home and property at any one time.

5.1.2 Subsidiary Apartments

Definition: means a separate dwelling unit constructed within, or attached to, and is subsidiary to a detached dwelling.

Conditions:

1. One subsidiary apartment may be permitted in a detached dwelling and shall be contained within the same building as the detached dwelling.
2. Council may consider a subsidiary apartment for seniors as a granny suite built as an attachment to the main floor of the detached dwelling.
3. For the purpose of calculating lot area and yard requirements, the apartment shall be considered part of the detached dwelling.
4. A minimum of two off street parking spaces shall be required.
5. The minimum floor area required is 40 m^2 for a one-bedroom subsidiary apartment, plus ten square metres for each additional bedroom.
6. The apartment is completely self-contained, with facilities for cooking, sleeping, and bathing.
7. The apartment shall not alter the appearance of the structure as a detached dwelling;
8. Shall have a separate entrance/egress to the outside;
9. The apartment is completely self-contained, with facilities for cooking, sleeping, and bathing.
10. For lots without municipal water, Service NL shall determine water and sewerage disposal requirements and a permit will be issued subject to its approval.

5.1.3 Satellite Dish

Satellite Dish - Residential

Notwithstanding the requirements of the Use Zone Tables, a satellite dish associated with a residential use shall be permitted subject to the following conditions:

1. a satellite dish which is attached to or forms part of a dwelling shall not exceed a diameter of one decimal two five metres (1.25 m);

Satellite Dish -Commercial

A satellite dish associated with a commercial use shall be permitted to the following conditions:

1. unless otherwise determined by Council, there shall be one satellite dish per lot;
2. the satellite dish shall not be located in the front yard or flanking side yard of a lot, unless the area surrounding the satellite dish is screened from public view by an adequate natural buffer or screen, the dish is consistent with the surrounding development of the area and the satellite dish does not create any visual obstruction to adjacent developments or passing vehicular traffic.
3. the satellite dish does not obstruct views from other properties.
4. the satellite dish is anchored to the building or site to withstand the appropriate wind loads as determined by Council.
5. the satellite dish design, structure and colour are complimentary and sensitive to both the development to which it is attached or situated and the immediate surrounding properties. In cases where Council deems it appropriate, a satellite dish will be required to be screened or landscaped in accordance with Council's requirements.

5.1.4 Solar Panel

For new buildings that proposed the installation of solar panels on the rooftop or yard areas or where there is an application for commercial development of a solar panel farm, Council may determine appropriate setbacks and height conditions specific to the building or site through evaluation of the impact on adjacent properties and the benefits that may accrue to the community.

5.1.5 Electric Car Recharging Outlets

For new medium and higher density residential developments and new non-residential commercial, industrial, institutional and other building types, Council shall require the installation of electric car recharging outlets, and smaller car spaces within a proportion of the proposed site development parking space requirements.

5.2 ACCESSORY BUILDINGS

5.2.1 Accessory Buildings – General

Definition: ACCESSORY BUILDING (as set out in the *Ministers Development Regulations* under the *Urban and Rural Planning Act, 2000*) includes:

- a detached subordinate building not used as a dwelling, located on the same lot as the main building to which it is an accessory and which has a use that is customarily incidental or complementary to the main use of the building or land,
    - *for residential uses*, domestic garages, carports, ramps, sheds, swimming pools, greenhouses, cold frames, fuel sheds, vegetables storage cellars, shelters for domestic pets or radio and television antennae,
    - *for commercial uses*, workshops or garages, and
    - *for agriculture and industrial uses*, garages, offices, raised ramps and docks;

General Conditions:

1. Accessory buildings are permitted in residential use class provided the buildings are clearly incidental and complimentary to the main buildings' character, size and use.
2. Accessory buildings shall not be used for human habitation.
3. The side yard requirements set out in the Use Zone Tables shall apply to accessory buildings wherever they are located on the lot but accessory buildings on two (2) adjoining properties may be built to property boundaries provided they shall be of fire-resistant construction and have a common firewall.
4. Quonset style/steel accessory buildings may only be permitted within the Resource Use Zone.

5.2.2 Accessory Buildings - Residential Use Classes

Conditions

1. Size of residential accessory building shall be a maximum of 7% of the lot size of 75 m^2, whichever is less; except for the Residential Rural zone where larger accessory buildings may be allowed at the discretion of Council with consideration of the criteria listed in #10 below;
2. Accessory buildings shall not be located:
    a. within 1.2 m from any property boundary and 2.4 m from any building;
    b. within any easement area;
    c. in front of the building line on the street which the building has its legal civic address.
    d. An accessory building on a corner lot may be located in front of the building line on the flanking yard provided the location does not impede visibility on the flanking street, and the accessory building is set back a minimum of 7 m from the flanking street.
    e. Exception: Council may, at its discretion, allow an accessory building with a floor area less than 75 m^2 to be located in front of the building line provided that:
        i. A public notice has been advertised in accordance with the requirements for Variances;
        i. The accessory building shall be setback a minimum of 15 m from the front property line;
        ii. The slope of the lot and/or natural screening effectively blocks the view of the building from the street and adjoining properties. The placement of the building must not negatively affect neighbouring properties; and,
        iii. A development application is submitted showing all buildings on the lot including the proposed accessory building.

3. Accessory buildings shall not be used for commercial or industrial uses on a residential property, regardless of the use zone in which it is located, unless Council has issued a permit for such use;
4. Repairs to vehicles, other than minor vehicle maintenance, are prohibited in accessory buildings;
5. No truck, bus, semi-trailer, freight container, or other vehicle body shall be used as an accessory building;
6. No outside storage or display of materials or finished product;
7. Except for minor maintenance, no accessory building will be used for the repairing, painting, dismantling, or scrapping of vehicles or machinery;
8. An accessory building may be used for a home business as outlined in home business section.
9. Exterior Cladding: With the exception of greenhouses, the exterior cladding of the accessory building shall match or coordinate with the exterior siding of the main dwelling on the lot and shall be residential in character.
10. Discretionary Decisions of Council: In making discretionary decisions with respect to accessory buildings, Council shall consider:
    a. The location of the accessory building on the lot;
    b. The size of the accessory building compared to the dwelling on the lot and the size of structures on neighbouring properties;
    c. Visibility of the structure from neighbouring properties and/or street;
    d. If the accessory building will block a view and/or light from adjoining properties;
    e. The use of the accessory building;

f. Site conditions, such as topography and the presence of wetlands; and
g. Any other on-site conditions that may warrant Council's considerations.

10. Residential swimming pool: Subject to the following requirements, the swimming pool shall:
    a. be located in the rear yard of a residential property;
    b. not encroach upon any easement;
    c. not be located under any overhead power line;
    d. have a minimum setback of two metres (2 m) from any property boundary; and
    e. have an area surrounding a swimming pool and pool deck shall be fully fenced to prevent people, especially children, from unauthorized access to the pool area.

11. Residential Wharf/Boathouse/Slipway/Breakwater:
    a. Subject to the following conditions:
        i. Must meet Use Zone Site Development Conditions;
        ii. Appropriate noise and separation measures shall be incorporated into the development to reduce noise impact on surrounding properties;
        iii. Wharf/Boathouse/Slipway/Breakwater structures shall follow the guidelines for the *Construction and Maintenance of Wharves, Breakwaters, Slipways and Boathouses.*

    b. The Applicant must obtain a permit under of the *Water Resources Act, 2002* under Section 48 (http://assembly.nl.ca/Legislation/sr/statutes/w04-01.htm) for any infilling or dredging work associated with these structures or other works near or in any body of water prior to the start of construction. Contact: Manager, Water Rights & Investigations Section - (709) 729-4795.

5.2.3 Accessory Buildings – Non-Residential

General Conditions:

An accessory building associated with a non-residential use shall be permitted, subject to the following requirements:

1. an accessory building shall be located on the lot so that it has no undesirable impact on the private enjoyment of adjoining residential lots;
2. the use of an accessory building shall be directly related to the principal use or building on the lot;
3. an accessory building shall not be erected or placed upon any easements;
4. an accessory building shall maintain a minimum side yard and rear yard of 1.2 m;
5. an accessory building shall maintain a minimum separation distance of 2.4 m from the main building;
6. radio and television antennae shall have a maximum height of fifteen metres (15 m);
7. the exterior siding of an accessory building shall match or be complimentary to the exterior siding of the principal building on the lot.

Specific Accessory Buildings:

1. Trailer:

The use of a trailer as an accessory building shall be permitted within the Industrial Light (IL) Use Zone, subject to the trailer meeting the following conditions:

1. the use of the trailer shall be restricted to storage purposes only;
2. the trailer shall not be used for human habitation;
3. the trailer shall be located in the rear yard of the lot so that it is not visible from the street;
4. the trailer shall not be permitted to be located in a rear yard which abuts a residential or open space Use Zone;
5. the trailer shall be placed and anchored on the site in accordance with the requirements of Council;
6. the trailer shall be kept in a good condition aesthetically and structurally; and
7. if, in the opinion of Council, the appearance and structural soundness of the trailer is unacceptable, the trailer will be required to be removed from the site immediately.

2. Wharf/Boathouse/Slipway/Breakwater:

1. Subject to the following conditions:
   a. Must meet Use Zone Site Development Conditions;
   b. Appropriate noise and separation measures shall be incorporated into the development to reduce noise impact on surrounding properties;
   c. Wharf/Boathouse/Slipway/Breakwater structures shall follow the guidelines for the *Construction and Maintenance of Wharves, Breakwaters, Slipways and Boathouses.*
2. The Applicant must obtain a permit under of the *Water Resources Act, 2002* under Section 48 (http://assembly.nl.ca/Legislation/sr/statutes/w04-01.htm) for any infilling or dredging work associated with these structures or other works near or in any body of water prior to the start of construction. Contact: Manager, Water Rights & Investigations Section - (709) 729-4795

6.0 BUILDINGS, LOT SITING AND LANDSCAPING AND SERVICES

6.1 BUILDINGS

6.1.1 Building Orientation

Taking into consideration 4.7.1 regarding building orientation to the street, wherever possible, development or the siting of a building on a lot should be configured to optimize winter solar exposure and shall take into consideration street/building layout, shading, landscaping, and on-site parking.

6.1.2 Building Quality

1. Building Materials - All building materials for exterior finish will be subject to approval of Council in respect to acceptable visual quality and design appearance.
2. Outside Elements - Any outside elements including exposed ductwork, outside air conditioning units, cooling towers and tanks are subject to the approval of Council in respect to acceptable visual quality.

6.1.3 Heat Pump, Mini-Split Heat Pump, Air Conditioner, or External Fan

1. A heat pump, air conditioner or external fan should be located
    a. in the flanking street side yard or rear yard of the principle building of the lot of property on which the heat pump, air conditioner or external fan is situated;
    b. no closer than 2.4 m from a side lot line of the lot or property on which the heat pump, air conditioner or external fan is situated; and
    c. no closer than 3 m to a door or window of a dwelling on an adjoining lot.
2. Upon receipt of a noise complaint about a heat pump, mini-split heat pump, air conditioner or external fan unit, the unit shall be inspected and certified to be in appropriate working order by a company certified to service the equipment. Proof of inspection and certification must be made available upon request by the Town and at no cost to the Town. If the noise continues and exceeds the noise level permitted for a heat pump, mini-split heat pump, air conditioner or external fan unit, the property owner will be required to undertake noise mitigation measures or relocate the unit.
3. A heat pump shall be placed on a concrete base that rests on or in the ground, or equivalent.
4. A mini-split heat pump shall:
    a. be located in any yard of the principle building of the lot or property on which the mini-split heat pump is situated;
    b. be attached securely to the principle building of the lot or property on which the mini-split heat pump is situated as per the manufacturer's specifications, or equivalent, and in a manner, that prevents any potential vibration of the equipment during operation or attached securely to a concrete base resting on or in the ground; and
    c. not generate noise exceeding 55 dBA at the property boundary. If a mini-split heat pump is found to be exceeding that limit, noise mitigation measures shall be employed to reduce the noise level to a maximum of 55 dBA.

6.1.5 Heritage Building or Structure

Where Council designates a building or structure as a heritage building or structure, no person shall pull down or demolish the designated heritage building or structure except for life safety reasons or to carry out a public work, nor shall the exterior of the heritage building or structure be repaired or altered without the written approval of Council.

6.2 LOT SITING AND LANDSCAPING

6.2.1 Lot Area

1. No lot shall be reduced in area, either by the conveyance or alienation of any portion thereof, such that:
    a. the lot area, frontage, front yard, rear yard, and side yards are less than the minimums permitted by these Regulations for the zone in which such lot is located, and
    b. the lot coverage of all buildings exceeds the maximum permitted by these Regulations for the zone in which such lot is located.
2. Where any part of a lot is required by these Regulations to be reserved as a yard, it shall continue to be so used regardless of any change in the ownership of the lot or any part thereof, and shall not be deemed to form part of an adjacent lot for the purpose of computing the area thereof available for building purposes.

6.2.2 Lot Size Exceptions

Where, at the time of registration of these Regulations, one or more lots already exist in any residential zone, with insufficient frontage or area to permit the owner or purchaser of such a lot or lots to comply with the provisions of these Regulations, then these Regulations shall not prevent the issuance of a permit by Council for the erection of a dwelling thereon, provided that the lot coverage and height are not greater than, and the yards and floor area are not less than, the standards set out in these Regulations.

6.2.3 Unsubdivided Land

Development is not permitted on unsubdivided land unless sufficient area is reserved to satisfy the yard and other allowances called for in the Use Zone in which it is located and the allowances shall be retained when the adjacent land is developed.

6.2.4 Lot Frontage on a Public Street

No residential, commercial, industrial, or public building shall be erected on a lot that does not front directly onto a public street.

6.2.5 Building Line (Frontyard Setback)

1. Council may vary (see 2.4.1) established building lines on an existing or proposed street under 2.4.1 taking into consideration that it:
    a. does not create an obstruction to other dwellings on the street;
    b. is sympathetic to the location and setback of adjacent buildings;

c. does not create a safety hazard; and,
d. is not a hindrance to municipal snow clearing or snow storage operations on the street.

2. The building line setback is measured from the front property line;
3. Adequate building setback from roads shall be required in order to maintain road standards, consider public safety requirements for side/back/front yards; and conform to the existing development pattern; and, ensure adequate provision is made for light, privacy, and amenity;
4. Setbacks should be sufficient to allow for landscaping of front yards, vehicle off-street parking and take into consideration Town service obligations, such as, snow clearing;
5. To encourage a more interesting streetscape Council can allow staggered building line setbacks;
6. Council, at its discretion, may allow development to complement existing building setbacks of adjoining properties by varying the yard requirements after notification of the proposed variance is given to neighbouring property owners in accordance the section on Variances in these Regulations.
7. If required, the building line as set out in the provincial ***Building Near Highways Regulation*** along any provincial highway, must be adhered to.

6.2.6 Flanking or Corner lots and double fronting lots

In the case of a corner lot, the shortest lot line facing the street shall be the front lot line, and in the case of double fronting lots or where the lot lines are equal in length, the front lot line shall be determined by the orientation direction of the majority of adjacent neighbourhood buildings.

6.2.7 Side Yards

An unobstructed side yard shall be provided on the exposed sides of every building in order to provide access for the maintenance of that building.

6.2.8 Multiple Uses on One Lot

Where two or more different uses may exist in a single building, more than one main building may be permitted on a single lot, or a single lot may contain more than one permitted use, provided that each use shall conform to all requirements in these regulations that are applicable to that use. EXCEPTION: This does not apply to a detached dwelling that is not part of a comprehensive development.

Multiple use may not be permitted where the Authority determines that the proposed use would not be compatible with existing uses on or adjacent to the lot by reason of safety, amenity, appearance, or nuisance.

Where more than one main building is developed on a single lot, sufficient area shall be reserved to satisfy the yard requirements and other allowances outlined in the Use Zone Table applicable to the lot. These allowances shall be maintained when the adjacent land is developed.

6.2.9 Outdoor Storage

1. Outdoor storage shall not be located in front yards.
2. The Council may require screening from street and other surrounding development.

3. Open storage shall be maintained with a stable surface to prevent raising or movement of dust, clay, mud or loose particles.
4. Open storage side yard minimum requirement = 5 m.
5. The Council may, where a development is unsightly or dangerous to health or safety, order the owner or occupier of the site to remove and dispose of unsightly or dangerous materials or buildings, or restore the unsightly or dangerous materials or buildings to a more acceptable and pleasing condition.

6.2.10 Landscaping

6.2.10.1 General Landscaping requirements

1. All areas that are disrupted by construction shall be reinstated by the developer using natural landscaping with a minimum of topsoil and grass sods. Wherever grass is a requirement for the development of a lot or space, a minimum topsoil depth of 150 mm will be required for the planting of grass or the laying of grass sods.
2. Slopes shall have a maximum vertical slope ratio of 2:1 and shall be landscaped with topsoil and grass sods or hydro seeded as determined by the Engineering Department.
3. Whenever an alternate landscaping treatment is approved by Council and the treatment includes ornamental gravel, the developer or property owner shall ensure that:
    a. an appropriate retaining wall or border is constructed to contain the gravel within the lot boundaries and along paved driveways, vehicular circulation areas, and parking areas, and
    b. the area between the border and the sidewalk or curb be maintained with grass in accordance with these Regulations.
4. The landscaping of properties and lots shall be in accordance with any Town Landscaping Guidelines as adopted by Council.
5. A landscape deposit in the amount to cover the costs of the landscaping of the lot or area may form a condition of the Development Permit and paid prior to the issuance of the applicable permit by the Town. The deposit shall be returned upon the successful completion of the landscaping to the satisfaction of the Town. The amount of the landscape deposit shall be as outlined in the Landscaping Guidelines as approved by Council.

6.2.10.2 Subdivisions

1. Wherever possible, natural areas should be maintained in their natural state and the destruction of these natural areas by development shall be minimized. If the natural area is a part of a public open space area, the developer shall prepare a landscape plan integrating the natural areas with the portions of the open space area that is to be developed for recreational purposes. The plan will illustrate the grading relationships between developed and natural areas of the park.
2. Minimum landscaping of the recreational open space area shall be topsoil and grass sods or hydro seed as determined by the Town.
3. Where it is determined by Council that berming or a swale is required, or that major sloping occurs within, or outside, the normal boundaries of a lot, it shall be the developer's responsibility to

landscape the berm, swale or slope with a minimum of grass. A landscape deposit will form a part of the subdivision agreement to be returned upon the acceptance of the area by the Town

4. The subdivision developer shall landscape all public open space areas that abut landscaped lots prior to proceeding with another phase within the subdivision development.

6.2.10.3 Residential

1. The front, side, and rear yards of a residential lot shall be landscaped with a minimum treatment of grass and related natural vegetation, and any variation or alternative landscaping treatment to this shall be proposed in the form of a landscaping plan prepared by a certified member of a recognized landscaping organization which is recognized by the Town to offer such landscaping expertise and service. With the exception of townhome and apartment building lots, the minimum area to be landscaped in the front yard of a residential lot is 50% unless otherwise determined by Council. Where a residential property abuts a publicly owned open space snow storage buffer immediately adjacent to a public road intersection, the entire front yard area, including the buffer located between the front lot line and the front wall of the dwelling, may be considered in the calculation of the 50% landscaped front yard requirement subject to the review and approval by Council.
2. The front yard landscaping of row dwellings and apartment building lots will be determined by Town staff as part of the application and plan review process.
3. A minimum of one tree shall be planted per six metres (6 m) of lot frontage as part of the initial landscaping feature of the lot, at the discretion of Council.

6.2.10.4 Commercial and Public Use/Institutional

1. The front, side, and rear yards of a commercial lot should be landscaped with a minimum treatment of grass and related natural vegetation;
2. On every lot, a minimum of one tree should be planted for every eight metres (8 - 9m) of lot frontage.
3. For smaller lot developments (frontages of 30 m or less), the proposed landscaping should be indicated on the development application.
4. On larger lots (frontages greater than 30 m), a landscape plan should be required as a condition of the development and the appropriate amount of landscaping as determined by the Town shall be illustrated on the landscaping plan.
5. The driveway and all vehicle circulation areas, including parking stalls and parking and shipping areas in all yards (front, side, and rear), should be paved and curbed.

6.2.10.5 Industrial

1. In the landscaped front yard of an industrial lot, a combination of natural landscaping elements should be required as part of the development or redevelopment of the lot.
2. The required side and rear yards of an industrial lot should be landscaped with a minimum treatment of grass and related natural vegetation, and any variation or alternative landscaping treatment to this requirement should be proposed in the form of a landscaping plan prepared by a certified member of a recognized landscaping organization which is recognized by Council to offer such landscaping expertise and service

3. A landscape plan should be required as a condition of the development and the appropriate amount of landscaping as determined by the Council be illustrated on the landscaping plan.
4. The driveway and all vehicle circulation areas, including parking stalls and parking and shipping areas, in all yards in the front, side, and rear yards (with the exception of exterior storage yards), should be paved with curbing extending from the front of the property up to the limits of the rear wall of the building.

6.2.10.6 Screening and Landscaping

Council may, in the case of existing unsightly development, order the owner or occupier to provide adequate and suitable landscaping or screening and, for this purpose, may require the submission of an application giving details of the landscaping or screening, and these Regulations shall then apply to that application. The provision of adequate and suitable landscaping or screening may be made a condition of any Development Permit where, in the opinion of Council, the landscaping or screening is desirable to preserve amenity, or protect the environment.

6.3 INNFRASTRUCTURE SERVICES

6.3.1 Streets and access to streets

1. A new street may not be constructed except in accordance with and to the design and specifications established by Council.
2. Access(es) shall be located to the specification of Council so as to ensure the greatest possible convenience and safety of the street system and Council may prescribe the construction of service streets to reduce the number of accesses to collector and arterial streets.
3. Where Council has adopted an access plan, the location of accesses to existing and new developments shall be in accordance with that plan.
4. No vehicular access shall be closer than ten metres (10 m) to the street line of any street intersection.
5. Access shall be located so that there is no visual obstruction for drivers of vehicles entering or exiting the development; therefore, to protect sightlines (view) of motorists and pedestrians:
    a. All occupied lands within 7 metres of a street intersection shall be kept free of any shrubs, plants, and trees that will impede the line of vision clear for motorists and pedestrians, and
    b. No building or structure shall be permitted to be erected, moved, enlarged, or reconstructed on any land that is within 7 metres of a street intersection.
6. In order to control access to streets, Council may, by the adoption of an Access Plan:
    a. determine the number, location and layout of accesses to a street;
    b. require an access to a service street, where direct access to an arterial street is not desirable;
    c. require two or more properties to share a joint access to an arterial street where individual accesses would not be desirable; and

6.3.2 Services and Public Utilities

Within any Use Zone Council may permit land to be used for the provision of public services and public utilities if the use of that land is necessary to the proper operation of the public service or public utility concerned, provided that the design and landscaping of any development of any land so used is, in the opinion of Council, adequate to protect the character and appearance of the area.

6.3.3 Storm Water Management

1. Land shall be used, and graded in such a manner that run-off from the land or development does not negatively impact adjoining properties or downstream storm sewer systems, and that all surface drainage shall be captured on site where feasible using rainwater management techniques in accordance with the requirements of Council.
2. Where stormwater service is not available, the development shall be required to provide to Council a stormwater management plan for the site.
3. Where development results in the discharge of storm water into a wetland, waterbody, or watercourse, such discharge shall be designed to minimize any environmentally detrimental effects on the receiving water or watercourse, and shall be designed and constructed in accordance with the requirements and conditions of Council.
4. Council may require that large paved parking areas prepare a storm water discharge plan, and provide for oil interceptor plate technology within the catchment's system to filter oil and other petrochemical residue that originates from the on-site parking areas.
5. Maintenance program items for the storm sewer system may include the following items:
    - Annual catch basin cleaning;
    - Flushing of lines;
    - Manhole inspection and repairs;
    - Clearing debris from large diameter culverts, outfalls, and overflow structures;
    - Ditch cleaning and maintenance in unenclosed storm water systems; and
    - Record keeping of maintenance programs shall be completed.

6. Consideration should be given to green approaches to stormwater management as outlined in Section 9.
7. In order to minimize the effects of stormwater increases from land development Council may require landowners and developers to move towards a 'no new net flow' of stormwater from land development sites by pursuing the following indicative actions:
    a. Retain and/or detain stormwater on site;
    b. Take advantage of the topography to maintain natural drainage, for example, retaining natural depressions in the landscape, or to construct new detention ponds, to collect and store runoff and promote soil infiltration;
    c. Minimize impervious surfaces on site by reducing pavement area, using porous paving materials, etc.;
    d. Reduce runoff through measures such as capturing roof drainage in rain barrels and channeling runoff to gardens and low-lying areas;

e. Plant additional trees and vegetation if existing vegetation is not deemed adequate to promote soil infiltration and capture sediments;
f. Maintain a vegetated buffer between stormwater drainage outlets and watercourses to promote infiltration and minimize direct discharges into the watercourses; and/or
g. Re-establish vegetative cover as rapidly as possible in drainage ditches and other areas disturbed by construction activity.

6.3.4 Effluents

1. Liquid or Semi-Solid Industrial Drainage No liquid or semi-solid industrial waste or effluent shall be discharged on the surface or into the ground, and no water borne industrial waste or effluent shall be discharged into the surface drainage ditches or sanitary sewers unless the chemical and/or biological content is acceptable to Council or authorities having jurisdiction.
2. Any effluent or runoff leaving the site will be required to conform to the requirements of the Environmental Control Water and Sewage Regulations, 2003.

6.3.5 On-Site Services (Wells and onsite sanitary sewer systems)

Approvals involving installation of on-site water and sewer systems must be obtained from Service N.L.

6.3.6 Environmental Investigations

Approvals for any development that may have an environmental impact must be referred to Environmental Investigations, Service NL, Pasadena and/or the Pollution Preventions Division, Department of Municipal Affairs and Environment.

7.0 OFF-STREET LOADING, PARKING AND SIGNS

7.1 OFF-STREET LOADING REQUIREMENTS

1. Where Council deems necessary, for every building, structure or use requiring the shipping, loading or unloading of animals, goods, wares or merchandise, one or more loading spaces will be provided and maintained on the lot measuring at least 15 metres long and 4 metres wide with a vertical clearance of at least 4 metres. The space will have direct access to a public street or to a driveway of a minimum width of 6 metres that connects to a public street.
2. The number of loading spaces to be provided will be determined by Council.
3. The loading spaces required by this Regulation will be designed so that vehicles can manoeuvre clear of any street and so that it would not be necessary for any vehicle to reverse onto or from a street.

7.2 PARKING

7.2.1 Parking Area Standards

1. For every building, structure or use to be erected or enlarged, there shall be provided and maintained a quantity of off-street parking spaces sufficient to ensure that the flow of traffic on adjacent streets is not impeded by on-street parking of vehicles associated with that building, structure or use.
2. Each parking space, except in the case of a detached or attached dwelling, will be made accessible by means of a right-of-way at least 3 metres wide.
3. Residential parking spaces shall be provided on the same lot as the dwelling or dwellings.
4. Non-residential parking spaces shall be provided not more than 200 metres distant from the use for which the parking is required.
5. No regular parking of commercial vehicles or trailers except for vehicles with a gross weight of no greater than one tonne will be permitted.
6. Parking space for apartment buildings will be provided in the rear yard where possible.
7. Non-residential parking spaces shall be provided not more than 200 metres distant from the use for which the parking is required.
8. The parking facilities required by this Regulation will, except in the case of detached or attached dwellings, be arranged so that it is not necessary for any vehicle to reverse onto or from a street.
9. Where Council permits parking perpendicular to the curb, the minimum dimensions of each parking stall will be as follows:

Parking stall width	2.5 metres
Parking stall length or depth	5.5 metres
Aisle width separating opposite parking	7.0 metres
Aisle width separating a stall from	7.0 metres
Driveway width	7.0 metres

10. Where Council permits parking horizontal to the curb, the minimum length of the stall will be 7.00 metres and the aisle width will be at least 4 metres, or more if deemed necessary by Council.
11. For any other parking lot configuration, the requirements shall as be as specified by Council, but in no instance, shall the requirements be less than that specified for perpendicular parking spaces.
12. Other requirements for parking areas are as follows:
    a. The parking area will be constructed and maintained to the specifications of Council,
    b. Lights for illumination of the parking area will be arranged so as to divert the light away from adjacent development,
    c. Except on a service station or industrial lot, no gasoline pump or other service station equipment will be located or maintained in a parking area,
    d. No part of any off-street parking area will be closer than 1.5 metres from the front lot line in any zone,
    e. Where Council deems that strict application of the parking requirements is impractical or undesirable, Council may as a condition of a permit require the developer to pay a service levy in lieu of the provision of a parking area, and Council will use the full amount of the levy for the provision and upkeep of alternative parking facilities within the vicinity of the development.
13. Where, in these Regulations, a parking area for more than four vehicles are required or permitted:
    a. a parking area and an adjoining driveway shall provide drainage, lighting, curbs, and landscaping in accordance with requirements of Council.
    b. except in zones in which a service station is a permitted use, no gasoline pump or other service station equipment shall be located or maintained on a parking area;
    c. no part of any off-street parking area shall be closer than two metres (2 m) to any lot line in any zone;
    d. access to a parking area in non-residential zones shall not be by way of residential zones;
    e. where a parking area is in or abuts a residential zone, a natural or structural barrier at least one metre (1 m) in height shall be erected and maintained along all lot lines;
14. Where, in the opinion of Council, strict application of the above parking requirements is impractical or undesirable, Council may, as a condition of a permit, require the developer to pay a service levy in accordance with these Regulations in lieu of the provision of a parking area, and the full amount of the levy charged shall be used by Council for the provision and upkeep of alternative parking facilities within the general vicinity of the development.

7.2.2 Parking Development Plans

Council may exempt or change all the off-street parking required under Section 7.1 for a designated area, provided the development within the designated area is controlled by a Comprehensive Planned Development.

7.2.3 Off-Street Parking Requirements

1. The off-street parking requirements for are set out in the following table, and for those uses not indicated, then the parking and off-loading requirements are at the discretion of Council. In the case of developments that include more than one use or development, these standards shall be regarded as cumulative.
2. Adequate off-street provision for the drop-off and pick-up of persons will be provided on the same lot as the development unless otherwise stipulated by Council.
3. The number of spaces to be provided for off-street parking will be in accordance with the following table.

USE/DEVELOPMENT	**MINIMUM OFF-STREET PARKING REQUIREMENT** (m^2=square metres)
Amusement	One space for every 15 m^2 of gross floor area
Animal Grooming	One parking space for every 20 m^2 of gross floor area
Apartment Building	Three spaces for every two dwelling units
Automotive Sales	In addition to the parking spaces required for the principal building, one parking space for every 20 vehicles of capacity for sales display at the automotive sales lot
Bakery	One parking space per 15 m^2 of net floor area
Bank	One parking space per 15 m^2 of net floor area
Bank – Drive through	One parking space per 15 $m^2$of net floor area
Bar (night club)	One parking space for every 5 m^2 of seating area
Bed and Breakfast	One parking space per guest room in addition to the two spaces for the dwelling unit
Car Wash	One parking space per washing bay and one parking space for each 30 m^2 of office space
Clinic	Three parking spaces per examining room
Club and Lodge	One space for every 3 persons that may be accommodated at one time
Commercial Garage	One parking space per 30 m^2 of net floor area (parking provision for the storage of new and used vehicles for sale shall not be counted towards this requirement)
Convenience Store	One space for every 20 m^2 of gross floor area
Public Gathering Places	One space for every 60 m^2 of gross floor areas
Day Care-non-residential	One space for every 30 m^2 of gross floor area
Day Care-residential	One parking space per 30 m^2 of net floor area

USE/DEVELOPMENT	MINIMUM OFF-STREET PARKING REQUIREMENT (m^2=square metres)
Double Dwelling	Two spaces for every dwelling unit
Dry Cleaning	One parking space per 30 m^2 of net floor area
Educational	Schools - 2 spaces for every classroom; Further education - 1 space for every 5 persons using the facilities (students, faculty and staff)
Funeral Home	One parking space for every 5 m^2 of gross floor area used by visitors
Furniture & Appliance	One parking space for every 50 m^2 of gross floor area
General Industry	One parking space for every employee
General Service	One space for every 25 m^2 of gross floor area
Hazardous Industry	One parking space for every employee
Health Club	One parking space for every 20 m^2 of gross floor area
Hotel	One parking space for every 3 sleeping units plus one parking space for every 15 m^2 of banquet seating area
Light Industry	As specified by Council but not less than one space per 50 m^2 of gross floor area or 5 parking spaces, whichever is greater
Medical and Professional	One space for every 25 m^2 of gross floor area
Medical Treatment and Special	Once space per 22 square metres of suite or ward area
Mobile and Mini Homes	Two spaces for every dwelling unit
Office	One space for every 30 m^2 of gross floor area
Personal Service	One space for every 25 m^2 of gross floor area
Public Gathering Place-Indoor	One space for every 6 seats; or one space for every 15 m^2 of gross floor area
Regional Institutional Use	One parking space for every 10 spectators that may be accommodated at one time
Restaurant	One parking space for every 5 m^2 of seating area
Restaurant – Drive Through	One parking space per 5 m^2 of seating space
Restaurant -Take-out	One space for every 25 m^2 of gross floor area
Retail	One space for every 20 m^2 of gross floor area
Row Dwelling	Two spaces for every dwelling unit

USE/DEVELOPMENT	MINIMUM OFF-STREET PARKING REQUIREMENT (m^2=square metres)
Service Station	One space for every 20 m^2 of gross floor area
Shopping Centre	One space for every 20 m^2 of gross floor area
Detached Dwelling	Two spaces for every dwelling unit
Sport & Recreation facility	Three parking spaces for every 5 patrons of the facility at maximum capacity
Subsidiary Apartment	One parking space for every dwelling unit
Townhouse	1.5 spaces for every dwelling unit
Veterinary	One space for every 25 m^2 of gross floor area

7.2.4 Designated Mobility Impaired Parking Spaces

For any development where parking spaces for person with disabilities are required pursuant to the *Buildings Accessibilities Regulations* under the *Building Accessibility Act, 1990* (Newfoundland and Labrador), such spaces shall be provided on the basis of one (1) parking space per lot or four percent (4%) of the total number of required parking spaces provided on the lot, whichever is greater, and such parking space or spaces shall be designated and marked in accordance with the Designated Mobility Impaired Parking Regulations under the *Highway Traffic Act, 1990* (Newfoundland and Labrador) and the *Buildings Accessibilities Act, 1990.*

7.3. SIGNS (ADVERTISEMENTS)

7.3.1 Permit Required

No sign or advertisement shall be erected or displayed in the Planning Area unless a permit for the advertisement is first obtained from the Authority, except for those signs that are exempt from control as listed in the following provision.

7.3.1.1 Signs/Advertisements Exempt from Control

The following advertisements may be erected or displayed in the Planning Area without application to the Authority:

a. on a dwelling or within the courtyard of a dwelling, one nameplate not exceeding 0.2 m^2 in area;
b. on an agricultural holding or farm, a notice board not exceeding 1 m^2 in area and relating to the operations being conducted on the land;
c. on land used for forestry purposes, signs or notices not exceeding 1 m^2 in area and relating to forestry operations or the location of logging operations conducted on the land;
d. on land used for mining or quarrying operations, a notice board not exceeding 1 m^2 in area relating to the operation conducted on the land;

e. on a dwelling or within the curtilage of a dwelling, one nameplate not exceeding 0.2 m^2 in area in connection with the practice of a professional person carried on in the premises;
f. on any site occupied by a church, school, library, art gallery, museum, institution or cemetery, one notice board not exceeding 1 m^2 in area;
g. on the principal facade of any commercial, industrial or public building, the name of the building or the name of the occupants of the building, in letters not exceeding one-tenth of the height of that facade or 3 m, whichever is the lesser;
h. on any parking lot, directional signs and one sign not exceeding 1 m^2 in size, identifying the parking lot.

7.3.1.2 Provincial Highway Sign Regulations, 1996 (under the *Urban and Rural Planning Act, 2000*)

Permit for erection or display of advertisement on Provincial Highways shall be obtain from the Government Service Centre.

7.3.1.3 Application for Permit

Application for a permit to erect or display an advertisement shall be made to the authority in accordance with the requirements for a development permit as set out in the Administration Section.

7.3.1.4 Signs/Advertisements Prohibited in Street Reservation

No advertisement shall be permitted to be erected or displayed within, on or over any highway or street reservation.

7.3.1.5 Permit Valid for Limited Period

A permit granted under these Regulations for the erection or display of an advertisement shall be for a limited period, not exceeding two years, but may be renewed at the discretion of the Authority for similar periods.

7.3.1.6 Removal of Signs/Advertisements

Notwithstanding the provisions of these Regulations, the Authority may require the removal of any advertisement which, in its opinion, is:
a. hazardous to road traffic by reason of its siting, colour, illumination, or structural condition, or;
b. detrimental to the amenities of the surrounding area.

7.3.1.7 Approval Subject to Conditions

A permit may only be issued for the erection or display of advertisements which comply with the appropriate conditions and specifications set out in the Use Zone Tables in Schedule C of these Regulations.

7.3.1.8 Non-Conforming Uses

A permit may be used for the erection or display of signs or advertisements on a building or within the courtyard of a building or on a parcel of land, the use of which is a non-conforming use, provided that the advertisement does not exceed the size and type of advertisement which could be permitted if the development was in a Use Zone appropriate to its use, and subject to any other conditions deemed appropriate by the Authority.

7.3.2 SIGN STANDARDS FOR SPECIFIC ZONES

The following limitations on size and placement of signs apply to all residential zones:

7.3.2.1 Advertisements Relating to Onsite Uses

The conditions for the erection or display of an advertisement on any lot or site occupied by a permitted use or a legal non-conforming use shall be as follows:

a. The size, shape, illumination and material construction of the advertisement shall meet the requirements of Council, having regard to the safety and convenience of users of adjacent streets and sidewalks, and the general amenities of the surrounding area.
b. No advertisement shall exceed 1.5 m^2 in area.
c. Free standing portable illuminated signs ("yellow" or "Light Up Portable Signs") will not be allowed in the residential area.

7.3.2.2 Advertisements Relating to Offsite Uses

The conditions for the erection or display of an advertisement on any site, relating to a use permitted in this or another zone, or not relating to a specific land use, shall be as follows:

a. No advertisement shall exceed 1.5 m^2 in area.
b. When the advertisements relate to a specific land use, they shall be located within a reasonable distance of, and only show thereon the name and nature of the distance or direction to, the premises to which they relate.

8.0 SUBDIVISION OF LAND

8.1 SUBDIVISION STANDARDS

Note that the conditions and standards related to services as outlined in section 6.3 also apply to subdivisions, as appropriate.

8.1.1 Subdivision Standards apply

The provisions in this Section of the Development Regulations apply each of the following:

- The subdivision of land under single ownership into two or more lots, including the residual lot,
- Construction, upgrading, or extension of a public street, and
- Extension or upgrading of the municipal water and sewer system.

8.1.2 Subdivisions standards do not apply

The requirements of this Part shall not apply to the following:

1. Where the parcel being created is to be used solely for the unattended equipment necessary for:
    a. the operation of community water, storm or sanitary sewer systems;
    b. public utilities, including electrical substations or generating stations;
    c. air or marine navigational aids;
    d. any other similar public service or utility (including wind turbine 'farms');
2. Public institutional uses, including cemeteries;
3. Resource uses set out in the resource zone;
4. Conservation, open space, park uses;
5. **Minor subdivisions of four (4) or fewer lots** which do not require new public or private road construction or the installation of utility infrastructure or water and sewer services (other than private connections; these must comply with the development standards associated with the Use Zone).

8.1.2 Permit Required

No land in the Planning Area shall be subdivided unless a permit for the development of the subdivision is first obtained from Council.

No provision in a will that purports to subdivide land is of any effect to subdivide that land contrary to these Regulations.

8.1.3 Public Notice

Council shall at a minimum, at the applicant's expense, publish a notice in a newspaper circulating in the area of the application and consider any representations or submissions received in response to that advertisement.

8.1.4 Form of Application

Application for a permit to develop a subdivision shall be made to Council in accordance with the requirements for submitting and application in Administration Section.

8.1.5 Subdivision Subject to Zoning

The subdivision of land shall be permitted only in conformity with the Use Zones delineated on the Zoning Maps.

Residential subdivision proposals of ten (10) lots and more are intended to utilize the varied lot sizes for the RLD zone.

Residential subdivision proposals of less than ten (10) lots will not be bound by the outlined percentile proportion of varied lots except that at least one lot from each of the varied 465 m^2, and 560 m^2 lot size parcels listed in the RLD zone must be included within the proposed residential development.

8.1.6 Subdivision Permit Subject to Considerations

A permit shall not be issued when, in the opinion of Council, the development of a subdivision does not contribute to the orderly growth of the Town, creates unsustainable economic long-term burden for maintenance, or does not demonstrate sound design principles.

In considering an application, Council shall, without limiting the generality of the foregoing, consider the requirement set out in 2.2.2:

- the location of the land;
- the availability of and the demand created for schools, services, and utilities;
- the provisions of the Municipal Plan and Regulations affecting the site;
- the land use, physical form, and character of adjacent developments;
- the transportation network and traffic densities affecting the site,
- connectivity: access by road or trails to adjacent lands;
- integration with adjacent neighbourhoods;
- the relationship of the project to existing or potential sources of nuisance;
- soil and subsoil characteristics;
- the topography of the site and its drainage;
- natural features such as lakes, streams, topsoil, trees and shrubs and potential environmental effects with respect to watercourses, wetlands, steep slopes, drainage patterns, storm water generation and control, and loss or fragmentation of habitat,
- prevailing winds;
- visual quality, including landscaping, tree retention/replacement;
- community facilities;
- parks and open space;
- municipal costs/benefits related to the provision and maintenance and future replacement of roads, other infrastructure, and municipal services;
- energy conservation;

- housing affordability;
- efficient use of land; and,
- such other matters as may affect the proposed development.

Where Council determines that further information is needed which requires a professional technical assessment (i.e., environmental, geotechnical, drainage, etc.), the work shall be conducted by a qualified professional registered in the Province of Newfoundland and Labrador who will provide a certified report and recommendations at the expense of the applicant.

Proposed developments shall be compatible with the existing character of the neighbourhood and adjacent buildings, and in accordance with these Regulations.

Where parcels overlap the Municipal Planning Area boundary, a referral to the adjacent regulatory authority is required.

8.1.7 Restriction on Sale of Lots

The developer shall not develop or dispose of any lot within a subdivision for the purposes of development and no building permit shall be issued until Council is satisfied that:

- the lot can be serviced with satisfactory water supply and sewage disposal systems,
- satisfactory access to a street is provided for the lots, and
- the lot meets the minimum development standards for the Use Zone in which the lot is located.

8.1.8 Building Permits Required

Notwithstanding the approval of a subdivision and a permit to subdivide land by Council, a separate building permit shall be obtained for each building proposed to be erected in the area of the subdivision, and no building permit for any building in the area shall be issued until the developer has complied with all the provisions of these Regulations with respect to the development of the subdivision.

8.2 SUBDIVISION PERMIT REQUIREMENTS

8.2.1 Subdivision Development Agreement

Where Council has determined that a subdivision development agreement is a condition of a permit for the subdivision development, the subdivision development agreement shall meet the conditions of Development Agreements as set out in the Administration Section.

8.2.2 Municipal Services to be Provided

No permit shall be issued for the development of a subdivision unless provisions satisfactory to Council have been made in the application for a supply of drinking water, a properly designed sewage disposal

system, and a properly designed storm drainage system so as not to affect adjoining and nearby properties.

8.2.3 Private Well Water Source: Groundwater Supply Assessment and Reporting

A groundwater assessment report shall be required to be completed and submitted by the subdivision applicant to the Town as part of the subdivision approval process where a minimum sized subdivision is to be serviced by individual wells.

The Groundwater Assessment Report must be prepared in accordance with the Department of Municipal Affairs and Environment's Groundwater Supply Assessment and Reporting Guidelines for Subdivisions Serviced by Individual Private Wells and submitted to the Water Resources Management Division for review and approval.

Number of Lots	Groundwater Assessment Requirement		Number of Test Wells
	Level 1	Level 2	
2-4	No-but may be required if site has history of ground water quality and quantity issues	No	0
5-15	Yes	may be required if site has history of ground water quality and quantity issues	may be required if site has history of ground water quality and quantity issues
16-30	Yes	Yes	1
31-45	Yes	Yes	2
46-60	Yes	Yes	3
61-75	Yes	Yes	4
75-90	Yes	Yes	5
91-105	Yes	Yes	6

8.2.4 Fees and Service Levies

8.2.4.1 Subdivision Fees

The applicant may be required to pay a subdivision application fee as determined by Council at the time of submitting a Development Application to subdivide.

The subdivision application fee may be calculated on a per-lot basis for every lot created by the subdivision of land. This fee may be calculated in addition to any other fee required under the regulation addressing Development Charges.

8.2.4.2 Service Levies

- The applicant shall be required to pay all service levies and local improvement assessments identified by Council for connection to services, utilities, streets, and for the construction or improving of capital works funded by Council or under Council's direction which benefit and accommodate the development or subdivision.
- The service levies or local improvements assessments will be paid in such amount and in such form as determined by Council as a condition of permit or as a condition of a Development Agreement to subdivide land and such payment will be agreed upon prior to construction occurring on the land.
- Refer to Section 2.6.3 regarding financial guarantees and Section 2.6.4 for criteria to be used when setting service levies.
- This section shall not affect any outstanding levies and/or assessments that were determined prior to the enactment of these Regulations.
- The applicant shall pay the cost of all capital works necessary to serve the proposed development or subdivision.

8.2.4.3 Deposit of Securities

As a condition of a permit to develop a subdivision and as part of a Development Agreement to subdivide, the applicant shall deposit with the Town a security to cover the cost of all the subdivision improvements and completion thereof. These securities shall be payable after approval by Council and before issuance of a construction permit under these Regulations.

8.2.4.4 Land for Public Open Space

Before a development commences, the developer shall, if required, dedicate to Council, at no cost to the Town, an area of land equivalent to (10%) of the gross area of the subdivision for public recreational open spaces, subject to the following requirements:

- where land is subdivided for any purpose other than residential use, Council shall determine the percentage of land to be dedicated;
- if, in the opinion of Council, no public open space is required, the land may be used for such other public use as Council may determine;
- the location and suitability of any land dedicated under the provisions of this Regulation shall be subject to the approval of Council but in any case, Council shall not accept land which, in its opinion, is incapable of development for any purpose;
- Council may accept from the developer, in lieu of such area or areas of land, the payment of a sum of money equal to the value of the land which would otherwise be required to be dedicated; and,
- this money received by the Authority (above), shall be reserved by the Town for the purpose of the acquisition or development of land for public open space or other public purpose.

Land dedicated for public use in accordance with this Regulation shall be conveyed to the Town and may be sold or leased by Council for the purposes of any development that conforms with the requirements of these Regulations, and the proceeds of any sale or other disposition of land shall be applied against the cost of acquisition or development of any other land for the purposes of public open space or other public purposes.

8.2.4.5 Tree retention and replanting

For the purposes of this regulation, a 'significant tree' means a tree having a caliper of 20 centimetres or greater as measured at a height of 1.5 metres above ground level; and a 'stand of trees' refers to retention of cluster of trees along the property line edges of development sites, as a component of park space, as an element of newly constructed on-site pedestrian walking trails, or as a shade and natural area in the rear year of development sites.

Subdivision and/or rezoning applicants are to submit tree retention and replanting proposals for Council's consideration at time of submission of the development application. When reviewing a subdivision application, except for building envelope, driveway and servicing/ utility locations, Council will strive to retain significant trees and clusters of trees on-site. Land developments for new building lots are to maintain buffers of natural trees and other vegetation, or to plant new trees and install other approved landscape features, wherever feasible as determined by the Town, along the rear portion of properties. Where retention is not proposed, tree replanting, in addition to street tree planting, is to occur

Lot grading plans will need to consider the land contours of the site to retain trees.

Two street trees for each new residential lot should be provided at a minimum spacing of 9.0 metres at the frontage of all newly developed lots. The street trees should to be a minimum height of 1.5 metres at time of planting, and are to be trees of native species to NL with root systems that are not invasive to in-ground infrastructure systems and roads.

The Town will review and refine the street tree replanting policies following initial implementation.

Council may choose to defer subdivision and/or rezoning proposals that entail cutting and removal of trees on a proposed development site prior to submission of a development application, on the basis that the applicant provide to the Town a comprehensive tree replanting scheme.

Where extensive tree cutting and removal occurs on property that is not subject to a current subdivision or rezoning application, Council may choose to defer any future application for development on the subject site until the property owner/applicant has submitted a proposal to replant substantial replacement trees on the subject lands.

8.3 SUBDIVISION DESIGN STANDARDS

No permit shall be issued for the development of a subdivision under these Regulations unless the design of the subdivision conforms to the following standards:

1. The finished grade of streets shall not exceed ten percent (10%).
2. The plan should indicate which streets are classified as arterial, collector or service (local) roads.
3. Every cul-de-sac shall be provided with a turning circle of a diameter of not less than thirty metres (30 m).
4. The maximum length of any cul-de-sac (or dead-end street) shall be:

a. two hundred metres (200 m) in areas served by, or planned to be served by, municipal piped water and sewer services;
b. three hundred metres (300 m) in areas not served by, or planned to be served by, municipal piped water and sewer services;
c. all cul de sac water mains will be connected to a water main on an adjoining street or will be looped back to ensure continuous water flow and prevent stagnant water at the end of dead-end pipes.

5. Emergency vehicle access to a cul-de-sac shall be not less than three metres (3 m) wide and shall connect the head of the cul-de-sac with an adjacent street.
6. No cul-de-sac shall be located so as to appear to terminate a collector street.
7. New subdivisions shall have street connections with an existing street or streets.
8. All street intersections shall be constructed within 5° of a right angle and this alignment shall be maintained for thirty metres (30 m) from the intersection.
9. No street intersection shall be closer than forty metres (40 m) to any other street intersection.
10. No more than four streets shall join at any street intersection.
11. No residential street block shall be longer than four hundred and ninety metres (490 m) between street intersections.
12. Streets in residential subdivisions shall be designed in accordance with the approved standards of Council, but in the absence of such standards, shall conform to the following minimum standards:

Type of Street	Street Reservation	Carriageway or Pavement Width	Sidewalk Width	Sidewalk Number
Arterial Streets	30 m	15 m	1.5 m	1
Collector Streets	20 m	15 m	1.5 m	1
Local Residential Streets				
where more than 50% of the units are detached or semi-detached dwellings	15 m	9 m	1.5 m	1
where 50% or more of the units are row houses or apartments	18-20 m	9 m	1.5	1
Service Streets		9 m	1.5	1

13. No lot intended for residential purposes shall have a depth exceeding four times the frontage.
14. Subdivision review shall determine that the Developable Area of each proposed lot shall be a minimum of 150.0 m^2, and not including any site area required for the development setback.
15. Residential lots shall not be permitted which abut a local street at both front and rear lot lines.
16. Development will have frontage on a publicly maintained road;

17. Council may require any existing natural, historical or architectural feature or part thereof to be retained when a subdivision is developed.
18. Land shall not be subdivided in such a manner as to prejudice the development of adjoining land.
19. Front Yard/Building Lines: Council may establish front yard/building lines for any subdivision street and require any new building to be located on such building lines.

8.4 SUBDIVISION ENGINEERING STANDARDS

No permit shall be issued for the development of a subdivision under these Regulations unless the design of the subdivision conforms to the requirements established by Council and the "Municipal Engineering Subdivision Standards" as approved by Council.

8.4.1 Engineer to Design Works and Certify Construction Layout

Plans and specifications for all water mains, hydrants, sanitary sewers, storm sewers, and all appurtenances thereto and all streets, paving, curbs, gutters and catch basins, and all other utilities deemed necessary by Council to service the area proposed to be developed or subdivided shall be designed and prepared by or approved by the Manager of Engineering Services. Such designs and specifications shall, upon approval by Council, be incorporated in the plan of subdivision.

Upon approval by Council of the proposed subdivision, the Manager of Engineering Services shall certify all work of construction layout preliminary to the construction of the works and thereupon the developer shall proceed to the construction and installation, at the developer's own cost and in accordance with the approved designs and specifications and the construction layout certified by the Manager of Engineering Services, of all such water mains, hydrants, sanitary sewers, and all appurtenances and of all such streets and other works deemed necessary by Council to service the said area.

8.4.2 Developer to Pay Engineer's Fees and Charges

The developer shall pay to Council all the Engineer's fees and charges for the preparation of designs and specifications and for the layout and supervision of construction; such fees and charges being percentages of the total cost of materials and labour for the construction and installation of all works calculated in accordance with the Schedule of Fees recommended by the Association of Professional Engineers and Geoscientists of Newfoundland and Labrador and in effect at the time the work is carried out.

8.4.3 Street Works May Be Deferred

The construction and installation of all curbs and gutters, catch basins, sidewalks, and paving specified by Council as being necessary, may, at Council's discretion, be deferred until a later stage of the work on the development of the subdivision but the developer shall deposit with Council, before approval of the application, an amount estimated by the Manager of Engineering Services to be reasonably sufficient to cover the cost of construction and installation of the works. In the later stage of the development, Council shall call for tenders for the construction and installation of the works, and the amount so deposited by the developer shall be applied towards payment of the contract cost. If the contract cost

exceeds the deposit, the developer shall pay to the Town the amount of the excess. If the contract price is less than the deposit, the Town shall refund the amount by which the deposit exceeds the contract price. Any amount so deposited with the Town by the developer shall be placed in a separate savings account in a bank and all interest earned thereon shall be credited to the developer.

8.4.4 Construction of Utilities

Within any street reservation, the placing of any utility structure or service such as a hydro pole, telephone pole, underground hydro service boxes, internet or cable services, Canada Post group mail boxes, fire hydrant, fire alarm or sign post, shall receive the prior approval of the Authority with regard to the proposed location of utilities, safe construction, required easements and the relationship to other structures within the street reservation and to adjoining buildings.

Placement of hydro transmission poles within the front yard street corridor of new residential subdivisions is not encouraged; such utility poles should be sited within a rear yard easement area in the design of new residential subdivisions of ten (10) lots and more, or provide the new residential lots with buried underground power and utility services.

8.4.5 Structures in Street Reservation

No structures shall be placed within any street reservation of any structure (e.g., a utility pole, bus shelter, fire hydrant, mail box, fire alarm, school bus shelter, sign post) without prior approval of Council which shall take into consideration safety considerations, such as, sight lines, obstructions, safe construction, and the relationship of the structure to the adjoining buildings and other structures within the street reservation, and relationship to the movement of vehicles and pedestrians.

8.4.6 Transfer of Streets and Utilities to Council

The developer shall, following the approval of the subdivision of land and upon request of Council, transfer to the Town, at no cost to the Town, and clear of all liens and encumbrances:

- all lands in the area proposed to be developed or subdivided which are approved and designated by Council for public uses as streets, or other rights-of-way, or for other public use; and
- all services or public works including streets, water supply and distribution, and sanitary and storm drainage systems installed in the subdivision that are normally owned and operated by Council.

Before Council shall accept the transfer of lands, services, or public works of any subdivision, the Manager of Engineering Services shall, at the cost to the developer, test the streets, services and public works installed in the subdivision and certify satisfaction with their installation.

Council shall not provide maintenance for any street, service, or public work in any subdivision until such time as such street, service, or public work has been transferred to and accepted by Council.

8.4.7 Mini/mobile home park subdivision

- The minimum size of parcel for a Mini/mobile home subdivision/park is 2 hectares.

- Where municipal services are not provided, the maintenance of the services is the shared responsibility of the members of the park.
- A development application for a mini/mobile home subdivision/park shall provide the same information as a set out this Part for major subdivisions.

9.0 DEVELOPMENT DESIGN GUIDELINES

9.1 PURPOSE AND APPLICATION

9.1.1 Purpose

The Development Design Guidelines outline additional requirements to the requirement of the Development Application as outlined in Section 2.2. The purpose of the Development Design Guidelines is to support the goals of the Town of Pasadena of building liveable neighbourhoods by enhancing the visual appearance of the neighbourhood and incorporate Smart Growth principles into the design of new development. The intent is to promote orderly and compatible development by implementing a high standard of attractive and functional building design.

The objective is to provide design guidelines that:

1. Provide criteria to achieve a high standard of building design, land use compatibility and site aesthetics that promote neighbourhood cohesiveness;
2. Encourage development scheme proposals for the Comprehensive Residential Development Areas to provide a mix of housing forms, choices, densities and affordability for residents of all ages;
3. Integrate the proposed Comprehensive Residential Development Areas in a manner that is cohesive with the existing community and the future objectives of the Town;
4. Ensure a high standard of neighbourhood aesthetics, such as landscaping, planting of trees, creation of open spaces, providing pedestrian mobility, minimizing site signage;
5. Facilitate more fiscally sustainable forms of residential development through efficient growth patterns;
6. Promote a neighbourhood environment that focuses on social interaction and pedestrian mobility;
7. Encourage residential development densities that can support community commercial land uses over the long term;
8. Reinforce the rural atmosphere of Pasadena by extensive use of landscaping and general 'greening' of both residential commercial sites and protecting the local sense of place by retaining natural features and vegetation, facilitating the traditional mixed age community by allowing for the needs of all ages, and maintaining local history through the use of architectural design elements;
9. Facilitate pedestrian street-friendly scale neighbourhood commercial development by reducing building setbacks to property lines, bringing stores closer to the street, providing for more shade areas, rest benches and amenity areas, creating more streetscape visual appeal, and making parking lot areas safer.

9.1.2 Application

These design guidelines will apply to residential, commercial, and industrial existing zones and the comprehensive development areas for each of these land use categories.

1. The guidelines identify general design criteria for specific types of new developments. These form a basis for Council review and consideration of building development proposals, prior to approval of a development permit or providing 'approval in principle, or allowing any site construction;
2. At the discretion of Council, certain design guidelines may be waived;
3. In the event of a conflict between the Development Design Guidelines and the requirements a Use Zone Table of the Development Regulations, the Use Zone Table requirements shall take precedence.
4. Council may require an applicant to include an assessment for compliance with the Development Design Guidelines as a component of the application. In addition to the development application information required with the development application, these may include:
    a. Comprehensive Development application, including principal and accessory buildings siting, parking configuration, unenclosed storage and landscaped areas;
    b. Building form details, including façade and design appearance, and building elevation drawings;
    c. Site landscape plan;
    d. Signage detail; and,
    e. Development design approval process.

9.1.3 Crime Prevention Through Environmental Design

Crime Prevention Through Environmental Design (CPTED) is defined as a multi-disciplinary approach to deterring criminal behaviour and nuisance activity through environmental design. CPTED strategies rely upon the ability to deter crime and nuisance activity through proper design, effective use and maintenance of our communities.

The following guidelines should be considered for all development in the Town of Pasadena. They are organized under the five principles of CPTED: Natural Surveillance, Wayfinding and Access, Public and Private Property Maintenance, and establishing Territoriality/Ownership.

I. **PRINCIPLE: NATURAL SURVEILLANCE:** Natural surveillance is "informal surveillance" by members of the community as they go about their everyday lives.

Guidelines:

- Avoid strict separation of land uses that may result in physical or temporal "dead zones" where there is little activity or signs of human presence.
- Ensure a compatible mix of uses that attracts people throughout the day and night.
- Balance the natural inclination for certain challenging uses (i.e., some bars or nightclubs) to cluster together with the need for a range of users in the area. Avoid a critical mass of challenging uses that may drive other uses elsewhere.
- Locate activity generators and/or seating and opportunities for overlook around edges to create opportunities for natural surveillance of open spaces, plazas, parks or important pedestrian thoroughfares.
- Orient buildings and incorporate fenestration (windows, entrances, doors, balconies, patios, etc.) to overlook public, semi-private and shared open spaces and to allow informal, natural surveillance.

- Enhance building design at street level to create an attractive, comfortable and safe interface with the public realm.
- Building design that ensures opportunities for overlook of public and semi-private spaces.
- Provide clear sightlines from within buildings to the entryways so occupants can clearly see outside before leaving the building. Design front entries so they don't create entrapment areas that are not visible from indoors. Design strong pedestrian connections between buildings and spaces. Building massing and site design should emerge from the movement of pedestrians through and within the site.
- Provide clear sightlines at intersections and between key public places and adjacent uses. Avoid blind spots.
- Allow for informal surveillance of public and semi-public spaces while ensuring privacy for residents.
- Incorporate and locate lighting to allow for surveillance, particularly around building entrances and parking facilities. Ensure lighting design provides even light and avoids shadows and glare.
- In areas where crime is likely to occur, landscape with low ground cover or high canopied trees. The trunk should be free of branches to a height of 2 metres.

II **PRINCIPLE: WAYFINDING AND ACCESS:** Wayfinding and controlling access/egress allows for people to move confidently in their community with safe access routes/entrances to their destination. Associated design helps define public and private spaces as well. The objective for the Town of Pasadena is to design and manage the built environment to maximize legibility and provide access control where appropriate.

Guidelines:

- Ensure important services (i.e., bus or taxi stops) and signs are thoughtfully located and clearly visible.
- Create local landmarks by drawing attention to existing man-made or natural features such as rivers, sea-fronts, public squares, public art, heritage sites, or important civic buildings. Locate these at terminating vistas, preserve sightline and/or reference them in the design of the neighbourhood.
- Support way finding with clearly legible signage, annotated maps and strategically located information centres.
- Design entrances and exits so they are easily identifiable and clearly visible.
- Use access control measures such as low, visually permeable fencing to deter illegitimate users from semi-private or private outdoor spaces.
- Use footpaths, pavement, gates, lighting and landscaping to clearly guide the public to and from entrances and exits.
- Use gates, fences, walls, landscaping and lighting to discourage public access to or from spaces that are not meant for public use (i.e., private outdoor spaces and unmonitored/poorly overlooked areas).

III PRINCIPLE: PUBLIC AND PRIVATE PROPERTY MAINTENANCE: Environment influences behaviour. If an environment shows signs of neglect or vandalism people there is the 'broken window theory' that indicates that people will then be more inclined to engage in unwelcome or criminal behaviour.

Guidelines:

- Encourage beautification of neighbourhoods by supporting community group initiatives.
- Avoid long expanses of light coloured walls that may attract graffiti artists. Engage these groups in dialogue to find alternative outlets for their creativity (i.e. commissioned murals or art exhibitions).
- Design the built environment using materials and fittings that will hold up to heavy use by the public.
- Use finishes that are resistant to vandalism and are easy to clean, repair or replace.

IV PRINCIPLE: TERRITORIALITY/OWNERSHIP: Reinforcing ownership promotes territorial behaviour and fosters proprietary concern. Owners have a vested interest and are more likely to challenge intruders or report them to the police. Clearly defining boundaries between private and public spaces promote shared responsibility for their security.

Guidelines:

- Define ownership and intended use through obvious design cues such as low fencing, benches and paving patterns/materials.
- Organize the site into a hierarchy of visually defined zones by using devices such as material changes, landscape features, grade changes, low fences/walls, or seating to delineate boundaries. Avoid ambiguous land uses or spaces.
- Balance the need for natural surveillance and the desire for privacy by creating filtered views that provide a sense of privacy while maintaining sightlines. Privacy screening should be visually permeable rather than solid screens. In building complexes with multiple users/ tenants (multi-family, office, institutional, etc.), cluster individual entrances and/ or windows around principal entries, courtyards or common areas.
- Relate exterior spaces immediately adjacent to buildings to establish territory. For example, low walls, landscaping and paving patterns to clearly define the space around a unit entry as belonging to the residents of that unit.
- Create a strong hierarchy of approaches and avoid providing too many ways to enter buildings or private areas. Ensure entrances and exits to the space are clearly marked.

9.2 DEVELOPMENT DESIGN SUBMISSION FORMAT

9.2.1 Comprehensive Site Plan

The Comprehensive Site Plan must contain the items listed in subsection 2.2.4.

9.2.2 Building Design Information

In addition to the information provided in accordance with Site Plan property detail and to address the Development Design Guidelines, at the discretion of Council, a land development applicant shall provide in the minimum, in whole or in part, the following building design information on the proposed site development:

- The front, rear and building side elevation views of all buildings proposed for the site;
- Detailed building design articulation elements such as for the front entrance, facades, roof lines, cornices and window placement and trim, and design attention to the building form and character to avoid monotony of design, use of blank walls and massing of the building;
- Building materials and colour schemes;
- Coordination of design of all buildings on site, and integration with the design character of the adjacent neighbourhood;
- Integration of site design elements of landscaping, parking and amenity areas with building design; and,

9.2.3 Landscape Plan

In addition to the site design information on a proposed site development that is provided, at the discretion of Council, a land development applicant shall provide in a minimum, in whole or in part, the following landscape plan information on the proposed site development:

- Landscape plans shall be for the entire site and shall include all proposed new plantings of hedges, shrubbery, trees, flowering plants, groundcover and grass areas, as well as existing landscaping, including trees proposed to be retained;
- Landscape improvements shall include those identified minimum landscape requirements within the applicable zone category for the proposed use;
- Landscape plans shall focus on the front and exterior side yard areas to the adjacent streets, on the front entrance to the principal building and on landscape treatments that complement the exterior of the principal building;
- Landscape plans shall additionally provide for screening of unenclosed storage areas, to minimize offsite glare from vehicle lights from the parking area, to screen rooftop heating, ventilation and air conditioning systems, and to provide for privacy and separation from adjacent land uses;
- All site developments shall provide for landscaping between the asphalt area of the parking area and the building face;
- Landscape plans are to include all proposed fences, masonry walls and landscape berms;

9.2.4 Signage Detail (also refer to Section 7.3)

- In addition to the site design and landscape information provided on a proposed site and building development, at the discretion of Council, a land development applicant shall provide, in whole or in part, the following signage detail information on the proposed site development:
- Signage shall be complimentary to the overall site, building and landscape design for the development project;
- Multi-tenant use of a commercial, industrial or comprehensive development zone site, shall utilize one shared sign;
- Decorative landscape treatment to the base of site signage shall be incorporated with the landscape plan for the development; and,
- A statement of rationale of how the proposed signage detail meets the intent of the design guidelines.

9.2.5 Development Design Approval

- Review and approval consideration by the Authority of a proposal's compliance to the Development Design Guidelines shall be subject to the following conditions:
    - The procedural process for consideration of Approval of the Development Design application shall be established by the Authority, and shall be in compliance with the *Urban and Rural Planning Act, 2000*;
    - Development Design Approval consideration may occur in conjunction with the Authority's consideration of approval of a rezoning application for the same property;
    - The Development Design Approval shall be valid for a two-year period from the date of Approval by the Authority;
    - Upon expiration of the two-year period, and in the absence of an extension from the Authority, a new application for Development Design Approval will be required;
    - No Building Permit for a development subject to a Development Design Approval shall be issued except in compliance to the approved Development Design;
    - All site, building, landscape and signage detail approved by the Authority for the Development Design shall be adhered to in site construction and development, except for minor changes as subsequently approved by the Authority; and,
    - A Landscape Letter of Credit to ensure suitable growth and adaptation of the landscape planting materials as part of the site development may be required by the Authority.

9.3 RESIDENTIAL DEVELOPMENT DESIGN GUIDELINES (except apartment buildings)

9.3.1 Building Design

All compact and duplex lot houses shall have their principal façade and entry facing the front lot line and the street;

1. The front façade of the residential house shall not be blank but shall include prominent and identifiable design articulation building forms and features such as appurtenances, porches, verandas and stoops so as to promote the home's exterior living space and street orientation to enhance social interaction and contribute to the ambiance of the neighbourhood;
2. Columns and posts at the front entry shall be spaced no farther apart than they are tall;
3. The front facades of compact and duplex homes should be finished with more than one finish material, and where more than one material is used, traditionally heavier materials such as stone and brick shall be located below lighter building materials such as wood, and fibre cement board;
4. Unless designed as a continuous architectural theme, adjacent compact and duplex lot buildings shall be visually distinct from each other;

054M-0001 054M-0003 054M-0002

5. At least two of the following design elements should vary for each adjacent compact and duplex residential building along a street: (a) building materials; (b) roofline; (c) windows; (d) building recesses; (e) building setbacks; (f) height; (g) entries; (h) colour; (i) building form; or (j) architectural details.
6. Use of wood and materials such as hardi-board for building cladding, and incorporation of other architectural details such as to accent window trim and doorways, and cornices, is encouraged;

7. Vinyl siding as building cladding is not encouraged;
8. Blank walls along the side and rear of the home are not permitted, the side and rear elevations of homes shall have design variation;
9. Windows shall be framed with design detail materials, and shall include a sill that is wider than the window opening;
10. Windows should be oriented to make best use of passive solar;
11. Downspouts should match rain gutters in material and finish, and where feasible all roof drains should be recharged into the site;
12. Parking shall be provided on-site within garages or within discrete parking areas and to the rear of residences accessed by a lane, and where parking is to be accommodated at the front of the house, if unenclosed, the area shall be landscaped, and where parking is to be provided within a garage, design attention shall include recessing the front of a garage from the house and use of similar design features and materials as the façade of the house;

13. All buildings should reflect environmentally responsible design and construction practices, and include consideration of the Energy Star program;
14. All areas of a compact or duplex lot located outside of the building envelope shall be fully landscaped and maintained with grassed areas, a variety of shrubs, hedges, and flowering plants, and a minimum of one street tree in the front yard area;
15. Energy efficiency and conservation should be considered in the design of landscaped areas and in the selection of plantings through:
    a. Retention of existing mature trees and vegetation where feasible;
    b. The use of native and/ or drought resistant plant species;
    c. Designing the landscaping to moderate the effect of the wind, to provide shade in the summer and to allow daylight into residential dwellings; and,
    d. Allowing natural drainage and permeation throughout the site.
16. Fences, garden walls or hedges should be used along all side lot lines, and lot lines which abut alleys; and,
17. The front yard area of the lot shall provide for an attractive landscape area and a pleasing streetscape view.

9.4 MULTI-UNIT/APARTMENT BUILDING DESIGN GUIDELINES

9.4.1 Building Design

1. Design and siting of multi-unit residential buildings shall seek to preserve and maximize views of the existing neighbourhood, to enhance privacy and liveability of the neighbourhood, to add attractive residential design to the neighbourhood, and to not overwhelm the character of the neighbourhood;
2. All multi-unit residential projects, especially those for congregate care, shall include provisions for universal accessibility including power assisted door openers, wide doorways, weather protection and exterior safety lighting, as well as specific dwelling unit design considerations;
3. Building materials, colour and architectural design of all multi-unit residential projects should complement the existing neighbourhood character and the natural landscape;

4. A common architectural theme of building form and character is encouraged to be used throughout the residential project while emphasizing strong individual dwelling unit identity through smaller design components;
5. The liveability of all new multi-unit residential dwelling units with regard to views and sunlight shall be considered in the building design through utilization of staggered building elevations, having all units above grade, and locating landscaped open spaces next to windows and adjacent buildings;
6. All multi-unit residential developments are to face the street, or give the appearance of facing the street, so as to provide an attractive street front orientation through attention to the building façade, unique building entrances, landscaping and fence treatment along the street;
7. Multi-unit residential developments adjacent to lower density residential homes shall create a transition in building mass and form, and where feasible, concentrate density to the centre of the development site, and locate lower density components of the development adjacent to nearby lower density residential homes;
8. Buildings that are more than two storeys in height should be set back further than adjacent one and two storey houses so that the multi-unit residential buildings seem smaller from the street;
9. Clustering of buildings on sites with environmentally sensitive areas or significant natural areas is encouraged;
10. Small clusters of town home units are a preferred design for town home developments;
11. Town home developments that contain more than three units per structure should provide variation in building facades to help reduce the visual length of individual buildings, and incorporate design components such as porch covered and ground level door entries that express strong individual unit identity so as to avoid significant repetition in adjacent dwelling units;
12. Larger apartment buildings and long rows of building frontages that reflect too much building massing, shall avoid large expanses of any one building cladding material, and shall incorporate architectural detail design elements that break up building massing through incorporation of variation in colour, recesses and articulation such as chimneys, projections and balconies, strategically placed windows and doors, use of varying building materials, and attention to appropriate and compatible roof forms to reduce and provide relief to building monotony;
13. Blank and/or flat building facades on all sides of a multi-unit residential development shall be avoided through the differentiating design articulation attention to wall lines and texture, use of protrusions such as bay windows, and innovative use of building materials;

14. Balconies and ground level patios of multi-unit residential buildings shall be designed with initial attention to the usability of the space by the resident, and secondly to the overall design of the building to ensure a cohesive attractive building image;
15. Recessed or semi-recessed balconies are preferred over projecting balconies that have the appearance of being 'tacked on';
16. Adequate storage space should be provided within each multi-unit dwelling or within a common area of a building so as to avoid 'clutter' of storage on balconies, patio areas and garages;
17. The exposed undersides of balconies and porches that are visible from the street should be covered with exterior finishes to provide a finished appearance to public view;
18. All proposed flat roofs shall have a prominent articulated cornice treatment;
19. Screening of mechanical equipment, especially mechanical systems sited on rooftops, is encouraged and, wherever possible, integrated into the architecture of the development;
20. Garage doors as part of a multi-unit residential development should not individually face the street but rather should be recessed behind the main building façade, grouped in pairs between adjacent residential units to allow individual unit entrances and facades to achieve more visual prominence to the street, or have garages sited in a manner that avoids multi-driveway accesses to the adjacent street;
21. Pedestrian pathways, with adequate lighting and landscaping treatment, are encouraged throughout multi-unit developments to connect the residential dwelling units with the site parking areas, and with the sidewalks;
22. Site design elements such as park benches, formal open space courtyards, shade areas and community gardens are encouraged with multi-unit residential sites;
23. Fencing for screening purposes should complement the overall site and building design by being in short lengths, and constructed of materials similar to the building design, or of decorative brick;
24. The size, height, location and design of multi-unit residential project name signs shall be architecturally integrated into the overall design of the form and character of project buildings; and,
25. Integration of Crime Prevention through Environmental Design (CPTED) principles and design elements into building form and character considerations is required.

9.4.2 Landscaping

1. Attractive site landscaping that creates visual interest and identity, a pleasing street image, and a buffer to adjacent land uses, must be incorporated into the design and development of all multi-unit residential projects;
2. In addition to the landscaping objectives of Regulation 47.3 (18), the intent for multi-unit residential sites is to maximize the amount of landscaped areas on the site including retention of stands of mature trees, and to minimize the amount of impervious surfaces so as to increase the natural absorption of rainwater of the site through consideration of innovative practices such as incorporating vegetated swales and rain gardens into the parking lot areas to capture and absorb rainwater runoff;
3. The frontage of new multi-unit residential developments should be entirely landscaped with specific attention to providing deciduous street tree species and a variety of plant materials and treatments, some of which should achieve substantial size at maturity, and in creating visual landmarks of hard and soft landscaping features on significant street corners and at locations of high visibility;
4. All multi-unit residential buildings should have immediately adjacent landscaped areas that include shrubbery and flowering plants;
5. The use of landscaping pockets of vegetation such as flowering shrubs within a well maintained and cut grassed area is encouraged throughout the site, and in side yard and perimeter areas of the site, the use of decorative brick walkways to open space elements such as shade areas, park benches and formal courtyards is encouraged;
6. Large continuous open spaces on the site shall be used to serve as a landscaped buffer to adjacent properties and buildings, and to provide privacy and access to sunlight for residents;
7. In non-apartment multi-unit development sites, each dwelling unit shall be provided with its own private open space, and landscape attention to the site shall delineate private open space from the more public open space areas;
8. Use of attractive fencing materials, including decorative masonry walls, shall be complimented by landscaping treatment at the base, but long monotonous lengths of fencing are not encouraged; and,
9. Where on site community vegetable gardens are to be provided to residents, water from rooftop runoff and downspouts should be redirected into rain barrels for later irrigation use, or directly into vegetated areas.

9.4.3 Parking Area Design

1. Successful site design of multi-unit residential projects extends to blending the parking areas of higher density residential developments into the overall site goals for form and character. For apartment residential developments, wherever feasible, automobile parking is encouraged to sited underground, and where parking for multi-unit residential projects is not underground, surface paved parking areas will require design attention;
2. Surface parking areas shall not be located within the building setback areas for the site, and they should be visually screened as much as possible from streetscape and frontage view through the use of landscape hedges, raised landscape berms, sloped grassed or flower bed areas, or by design elements such as decorative and brick fences;
3. Access to parking areas should occur from a rear lane whenever possible, and where access is to originate from a street, the number of site access and egress locations shall be minimized to maintain the streetscape appearance of the development, and to minimize disruption to pedestrian movement on the sidewalks adjacent to the street;
4. 'Viewing aisles' into the development and into the parking areas to maintain site safety should be integrated into site screening considerations;
5. Multi-unit residential developments with large parking requirements shall break up the surface parking locations into several smaller parking nodes, and connect the parking nodes with internal shared driveways;
6. Town home and similar multi-unit residential projects shall not create individual driveway access to the street for each dwelling unit but through site design layout, shall coordinate the site parking to provide for a minimum number of accesses to the street;
7. The use of alternative construction materials to asphalt such as paving stones, brick or aggregate concrete is encouraged to complement the overall landscape design of the site; and,
8. Pedestrian pathways that are clearly articulated and landscaped are encouraged to be provided to safely connect the multi-unit residential buildings with the site's parking areas, and to the sidewalks of the abutting streets.
9. Provision for bicycle parking and storage shall also be addressed.

9.4.4 Signage (Refer to Section 7.3)

1. The size, height and design of multi-unit project name signs shall be architecturally integrated into the overall design of the site buildings and landscaping; and,

2. Refuse collection containers and recycling storage areas are encouraged to be sited within buildings, underground or in the minimum, fully enclosed with attractive fencing and roofing, if necessary, that complements the principal building materials, or screened to an adequate height by similar landscape treatment.

9.5 COMMERCIAL DEVELOMENT DESIGN GUIDELINES

While it is acknowledged that existing commercial developments in the community have limited or no consistent building and landscape design pattern, new commercial development is intended to be coordinated with regard to building siting, form and character by encouraging a more aesthetically attractive and appealing streetscape and site appearance;

9.5.1 Building Design

1. Building form and character must include designing new buildings that are pleasant to look at, by providing for design attention and variation to the storefront façade, roof lines, exterior finish, colours and materials, and limiting the size and massing of buildings. Flat roof lines, blank expanses of exterior walls, buildings that appear to be temporary structures and asphalt paving that abuts the building face are commercial construction practices that are not encouraged;
2. The streetscape created by new building forms should complement each other and those existing buildings on adjacent sites, thereby avoiding monotony, but creating a positive visual effect;
3. Exterior finishes of new commercial buildings should be wood, brick, finished and textured concrete, natural stone or other materials of warm appearance. Substantial areas of unfinished concrete or metal cladding should be avoided;
4. Significant corners of new commercial buildings should be given added design emphasis with vertical architectural features and roof cornice elements;
5. Where a commercial building or development is located at a street intersection, the building design appearance shall be orientated to have the building 'front' all the adjacent streets;
6. New building development should be sited to have the building frontage on the main street alignment;
7. Buildings should be designed and located on a site to minimize impacts to adjacent land uses such as residential, to preserve views, to retain mature trees, to setback from any environmentally sensitive areas and retain natural vegetation, and to accommodate the natural grades of the site as much as possible to ensure that minimal site grading is required;
8. New commercial developments are encouraged to site closer to the front lot line and provide for attractive storefront design through façade attention, articulated window design and prominent store entry locations, and for enhanced pedestrian elements such as widened walkways and rest benches and overhead weather protection, and planting of deciduous street trees;
9. Large lot commercial developments shall provide for site development of buildings that are coordinated with each other, and are connected by pedestrian sidewalk linkages and incorporation of public spaces for open space amenity areas, public art, and shade areas with rest benches;
10. Attractive storefront façade and use of murals depicting the community's history, as approved by Council, on exterior building walls are encouraged;

11. Commercial developments will involve the siting and design of buildings to respect the residential character of the neighbourhood through a smaller commercial scale of buildings, to provide for a design theme that is compatible with the neighbourhood, significant site landscaping to provide for an effective transition from residential to commercial land uses and attention to parking area design to prevent lighting glare spilling over to residential areas;
12. Commercial growth through new building development and building renovation will be encouraged to consider the historic elements and character of downtown commercial cores and integrate this existing character with new design concepts through significant attention on the ground level storefront façade width and height, storefront window patterns and placement, storefront entrances, pedestrian weather protection, colours and materials, and to the building design treatment of the second storey, to the roof lines and to the building sides to avoid massing, to lighting for the building and signage;
13. For the Comprehensive Commercial/Industrial Development Area, development shall be part of an overall design concept plan for the area, and shall include site design that incorporates significant open space amenities and encourages building design that makes extensive use of wood timbers and local materials;
14. All new Commercial building developments shall consider and provide for an attractive streetscape view in conjunction with significant site landscaping, and convenient, well-lit and safe pedestrian access from the parking area to the principal building;
15. All new commercial buildings shall also be designed from the perspective of universal access for disabled and other persons and provide for multiple curb let downs, power assisted door openers, weather protection and other design elements;
16. Screening of mechanical equipment, especially mechanical systems sited on rooftops, is encouraged and, wherever possible, integrated into the architecture of the development; and,
17. Integration of Crime Prevention through Environmental Design (CPTED) principles and design elements into building form and character considerations is required in the design of all new and all significantly renovated commercial developments.
18. The Highway Commercial designated areas will strive to become highly designed commercial sites to the local street and to the Trans-Canada Highway corridor. Significant design attention to building placement, and massing of building walls, will be required to achieve attractive design to the Trans-Canada Highway. Innovative design features such as colourful façades, or possible murals on building walls, will be considered.

9.5.2 Landscaping

Attractive and substantial site landscaping that creates visual interest and identity, a pleasing street and pedestrian image, acts a buffer to adjacent land uses, screens parking and paved areas of the site, and emphasizes the natural environment character of Pasadena, must be incorporated into the design and development of all commercial development projects;

1. In addition to the landscaping objectives of Regulation 47.3 (18), the intent for commercial development sites is to maximize the amount of landscaped areas on the site including retention of

stands of mature trees, and to minimize the amount of impervious surfaces so as to increase the natural absorption of rainwater of the site through consideration of innovative practices such as incorporating oil-water separators in the catch basins of parking lot drains to cleanse parking lot runoff waters before they enter watercourses;

2. The frontage of new commercial developments, and other lot areas adjacent to a street, should be entirely landscaped with a minimum 3.0m wide landscape boulevard to serve as the primary buffer area between the adjacent street and the paved area of the site, with specific attention to providing within the landscape boulevard area, deciduous street tree species and a variety of plant materials and treatments, some of which should achieve substantial size at maturity, and in creating visual landmarks of hard and soft landscaping features on significant street corners and at locations of high visibility;
3. Street trees on a commercial site should be a minimum of 1.8m in height at time of planting, and planted at a ratio of one tree for every three parking spaces on site;
4. Use of hedges, floral displays, lawns with park benches, brickwork fences, shade areas and ornamental lights is also encouraged to be included in the site landscape plan;
5. On large sites such as for shopping centre developments, landscaping is to also consider the provision of public art or features such as water fountains and outside landscaped amenity, courtyard or plaza areas;
6. Unenclosed storage areas are to be sited to the rear of buildings and screened by landscaping or well-maintained fencing;
7. Large parking areas shall incorporate landscape features to create separated clusters of parking spaces and enable safe pedestrian circulation; and,
8. A Landscape Letter of Credit may be required by the Authority from the Development Design applicant to ensure successful planting of landscape material and ongoing maintenance for a minimum two-year period.

9.5.3 Parking Area Design

1. Since commercial site parking areas will be highly visible from adjacent streets, and the development design objective is to 'soften' the hard appearance of parking lot areas, surface parking lots shall be screened as much as possible from streetscape view by use of landscape hedges, grassed and raised landscape berms, and in specific locations, by attractive good-quality fencing;
2. No asphalt paving of a parking area shall directly abut a building face but rather an interface landscape area shall be planted between the car stops of the parking lot and the side of the building;
3. Large parking areas for commercial sites shall be encouraged to be broken up through the use of internal site landscaping islands that are curbed and planted with trees, raised pedestrian walkways and rest bench areas, and connective vehicle maneuvering aisles;
4. Commercial buildings should be strategically located on development sites to ensure safe pedestrian movement from the surface parking areas by initiatives such as maintaining clear public walking access to the entrance of commercial storefronts;

5. Short term bicycle parking facilities such as bike racks, should be sited in well-lit locations close to building entrances;
6. Loading and service areas shall be located to the rear and side of commercial buildings, removed from the main site parking areas and all pedestrian movements;
7. Parking areas shall be designed to support and assist disabled persons, and all disabled parking spaces shall be located close to the building entrance;
8. All surface parking spaces shall be clearly marked and painted with white parking space lines, and where 'small car parking spaces' are to be used, 'small cars' shall be clearly painted on the parking spaces;
9. The amount of asphalt surfaces on commercial parking lots is encouraged to be minimized through consideration of use of more permeable surface treatments such as decorative pavers and bricks; and,
10. Lighting for commercial parking lots shall not 'spill-over' and create glare on adjacent properties.

9.5.4 Signage and other design considerations (Refer to Section 7.3)

1. The size, height and design of commercial development name signs shall be architecturally integrated into the overall design of the site, and be generally limited to one sign per site, or on the basis of overall site frontage for large commercial developments; and,
2. Refuse collection containers and recycling storage areas are encouraged to be sited within buildings, or in the minimum, fully enclosed with attractive fencing and roofing, if necessary, that complements the principal building materials, or screened to an adequate height by similar landscape treatment.

9.6 INDUSTRIAL DEVELOPMENT DESIGN GUIDELINES

9.6.1 Site Design

1. Industrial sites are to be designed in a manner to reflect an appealing public appearance by being sited as close to the adjacent street as possible, accentuated with an attractive front of building orientation to the street and complimented with well-maintained site landscaping;
2. Overall site planning and development should address the entire property, and any environmentally sensitive areas should be identified, fenced and preserved;
3. Open space areas shall be created wherever possible on an industrial site, particularly within setback areas, and for employee amenity areas;
4. Site landscaping is to assume a greater role in overall site design and site layout so as to achieve goals of creating permeable areas for site drainage, and to generally 'green' the site to reflect the natural setting of the community;
5. Wherever achievable, new developments are encouraged to incorporate Low Impact Development (LID) techniques such as rain gardens, vegetated swales, separation of impervious surfaces, and/ or redirecting water from drain pipes into rain barrels and other systems for watering site landscaping;
6. Lighting of parking and outside work areas shall not illuminate adjacent or nearby properties to an intensity greater than existing street lights adjacent to nearby impacted sites;

7. Exterior site storage is encouraged to be minimized, and where present located away from public view as much as possible, and where necessary enclosed by an opaque or translucent screen, raised landscape berms, trees and substantial site landscaping;
8. Refuse collection and recycling areas are to be completely screened by landscaped vegetation or by fencing material that compliments the building design;
9. Loading areas are encouraged to be located to the rear or side of a building where a building façade does not face a street, and designed in keeping with the appearance of the principal building; and,
10. Signage is to be coordinated with the overall design of the site and landscaping.

9.6.2 Building Design

1. Buildings within the IL zone are to be designed to create an appealing visual relationship between buildings and streetscape;
2. Design detail for all new industrial buildings will be encouraged to consider the proposed building's bulk and size, and its height and massing in relation to neighbourhood area, and what building materials are to be used, and what level of landscape improvements are to be made to the building setback areas and parking locations, and additionally consider:
    a. Orientating the building to the street to present an attractive public 'face' for the industrial operation;
    b. Locating the office component of a new building to the front of the building and using materials such as glazing to highlight the building front;
    c. Differentiating one face of the building from another by utilizing different architectural features, colours and materials;
    d. Ensuring individual unit identity to units in multi-tenant buildings; and,
    e. Providing for finished treatment of open space on the site through attractive and well-maintained landscaping.
3. Developments should address the impact and visual exposure of building roof appearance by varying the design of the roof line, and considering all roof top equipment, stacks, roof vents, and mechanical systems as part of the overall building design, and group and screen as much as possible;
4. No exposed surfaces of buildings are encouraged to be finished with metal cladding or unpainted concrete blocks in the IL zone; and,
5. Manufactured mobile structures are not deemed as an appropriate building form in any industrial zone.

9.6.3 Landscaping

1. Attractive and substantial site landscaping that creates visual interest and identity, a pleasing street and pedestrian image, acts a buffer to adjacent land uses, screens parking and paved areas of the site, and emphasizes the natural environment character of Pasadena, must be incorporated into the design and development of all industrial development projects;
2. The overall landscaping intent for industrial development sites is to maximize the amount of landscaped areas on the site including retention of stands of mature trees, and to minimize the amount of impervious surfaces so as to increase the natural absorption of rainwater of the site

through consideration of innovative practices such as incorporating oil-water separators in the catch basins of parking lot drains to cleanse parking lot runoff waters before they enter watercourses;

3. The frontage and streetscape sides of new industrial developments in the IL zone should be landscaped with a minimum 3.0m wide landscape boulevard to serve as the primary buffer area between the adjacent street and the building area of the site, with specific attention to providing within the landscape boulevard area, deciduous street tree species and a variety of plant materials and treatments, some of which should achieve substantial size at maturity, and in creating visual landmarks of hard and soft landscaping features on significant street corners and at locations of high visibility;
4. Street trees on an industrial site should be a minimum of 1.8m in height at time of planting, and planted at a ratio of one tree for every four parking spaces on the perimeter of the site;
5. Use of hedges, floral displays, lawns with park benches, brickwork fences, shade areas and ornamental lights is also encouraged to be included in the front building area and employee amenity areas;
6. Wherever possible, use of raised landscape berms to screen parking and storage areas of a site is encouraged; and,
7. The overall industrial development is encouraged to maximize the positive impact of finished open space.

9.6.4 Parking Area Design

1. Employee parking areas and loading bays are not to be located within the setback area between the building and the street;
2. Since industrial site parking areas will be highly visible from adjacent streets in the IL zone, and the development design objective is to 'soften' the hard appearance of parking lot areas, surface parking lots shall be screened as much as possible from streetscape view by use of landscape hedges, grassed and raised landscape berms, and in specific locations, by attractive good-quality fencing;
3. No asphalt paving of a parking area shall directly abut a building face but rather an interface landscape area shall be planted between the car stops of the parking lot and the side of the building;
4. Parking lot area and loading bay access locations to the street shall be minimized;
5. Parking areas shall be designed to support and assist disabled persons, and all disabled parking spaces shall be located close to the building entrance;
6. All surface parking spaces shall be clearly marked and painted with white parking space lines, and where 'small car parking spaces' are to be used, 'small cars' shall be clearly painted on the parking spaces; and,
7. Short term bicycle parking facilities for employees such as bike racks, should be sited in well lighted locations close to building and workplace entrances.

9.7 GREEN APPROACHES TO STORMWATER MANAGEMENT

Land Conservation: Land conservation is another good tool for communities to use for reducing the risks of stormwater runoff and sewer overflows. The water quality and flooding impacts of urban

stormwater also can be addressed by protecting open spaces and sensitive natural areas within and adjacent to a Town while providing recreational opportunities for Town residents. Natural areas that should be a focus of this effort include riparian areas, wetlands, and steep hillsides.

Bioswales: Bioswales are essentially rain gardens placed in long narrow spaces such as the space between the sidewalk and the curb. Bioswales are vegetated, mulched, or xeriscaped channels that provide treatment and retention as they move stormwater from one place to another. Vegetated swales slow, infiltrate, and filter stormwater flows. As linear features, they are particularly well suited to being placed along streets and parking lots.

Planter Boxes: Planter boxes are an attractive tool for filtering stormwater as well as reducing the runoff that goes into a sewer system. Planter boxes are urban rain gardens with vertical walls and either open or closed bottoms. They collect and absorb runoff from sidewalks, parking lots, and streets and are ideal for space-limited sites in dense urban areas and as a streetscaping element.

Permeable Pavements: Permeable pavement is a good example of a practice that catches water where it falls. Permeable pavements infiltrate, treat, and/or store rainwater where it falls. They can be made of pervious concrete, porous asphalt, or permeable interlocking pavers. This practice could be particularly cost effective where land values are high and flooding or icing is a problem.

Green Streets and Alleys: Green streets combine more than one feature to capture and treat stormwater. Green streets and alleys are created by integrating green infrastructure elements into their design to store, infiltrate, and evapo-transpire stormwater. Permeable pavement, bioswales, planter boxes, and trees are among the elements that can be woven into street or alley design.

Green Parking: Parking lots are a good place to install green infrastructure that can capture stormwater that would usually flow into the sewer system. Many green infrastructure elements can be seamlessly integrated into parking lot designs. Permeable pavements can be installed in sections of a lot and rain

gardens and bioswales can be included in medians and along the parking lot perimeter. Benefits include mitigating the urban heat island and a more walkable built environment.

Urban Tree Canopy: Town trees, or tree canopy, soak up stormwater, provide cooling shade and help to slow traffic. Trees reduce and slow stormwater by intercepting precipitation in their leaves and branches. Many cities have set tree canopy goals to restore some of the benefits of trees that were lost when the areas were developed. Homeowners, businesses, and community groups can participate in planting and maintaining trees throughout the urban environment.

Downspout Disconnection: Water from the roof flows from this disconnected downspout into the ground through a filter of pebbles. This simple practice reroutes rooftop drainage pipes from draining rainwater into the storm sewer to draining it into rain barrels, cisterns, or permeable areas. You can use it to store stormwater and/or allow stormwater to infiltrate into the soil. Downspout disconnection could be especially beneficial to cities with combined sewer systems.

Rainwater Harvesting: This rainwater harvesting system is adapted to the architecture of the building and its surroundings.

Rainwater harvesting systems collect and store rainfall for later use. When designed appropriately, they slow and reduce runoff and provide a source of water. This practice could be particularly valuable in arid regions, where it could reduce demands on increasingly limited water supplies.

Rain Gardens: A rain garden can be beautiful as well as functional. Rain gardens are versatile features that can be installed in almost any unpaved space. Also known as bioretention, or bio-infiltration, cells, they are shallow, vegetated basins that collect and absorb runoff from rooftops, sidewalks, and streets. This practice mimics natural hydrology by infiltrating, and evaporating and transpiring—or "evapo-transpiring"—stormwater runoff.

APPENDICES

APPENDIX 1: Interpretation of Technical Terms used in the Development Regulations

Introduction

This section contains definitions of the technical terms used in the Municipal Plan and Development Regulations in order to ensure that they are correctly interpreted.

Terms and words in this regulation which are defined in the *Urban and Rural Planning Act, 2000* and *Development Regulations, 2000*, have the meaning expressed in that Act and cannot be amended by the Council; these are identified by a logo, as noted below:

Newfoundland Labrador = Definitions from the *Urban and Rural Planning Act, 2000* (the Act); these cannot be amended by Council; and,

= Definitions from the *Minister's Development Regulations* under the *Urban and Rural Planning Act, 2000;* these cannot be amended by Council.

Words and phrases used in these Regulations shall otherwise have the meanings as set out in the following definitions; these can be amended by the Council; these can be identified by the absence of a logo. Any other terms and words have the meaning as generally understood in the English languageAdditional definitions have been provided for interpretive guidance and.

Definitions

ACCESS means a way used or intended to be used by vehicles, pedestrians or animals in order to go from a street to adjacent or nearby land or to go from that land to the street;

ACT unless the context indicate otherwise, means the *Urban and Rural Planning Act, 2000;*

ADJACENT LAND means land that is contiguous to, physically touching or shares a boundary with, the parcel of land that is the subject of an application and includes land that would be contiguous if not for a highway, road, river or stream.

APPEAL BOARD means the appropriate Appeal Board established under the Act.

APPLICANT means a person who has applied to an authority for an approval or permit to carry out a development;

AUTHORITY means a council, authorized administrator or regional authority;

BUILDING means

(i) a structure, erection, alteration or improvement placed on, over or under land or attached, anchored or moored to land,

(ii) mobile structures, vehicles and marine vessels industrial and other similar uses,

(iii) a part of and fixtures on buildings referred to in subparagraphs (i) and (ii), and

(iv) an excavation of land whether or not that excavation is associated with the intended or actual construction of a building or thing referred to in subparagraphs (i) to (iii);

BUILDING HEIGHT means the vertical distance, measured in metres from the established grade to the

(i) highest point of the roof surface of a flat roof,

(ii) deck line of a mansard roof, and

(ii) mean height level between the eave and the ridge of a gable, hip or gambrel roof, and in any case, a building height shall not include mechanical structure, smokestacks, steeples and purely ornamental structures above a roof;

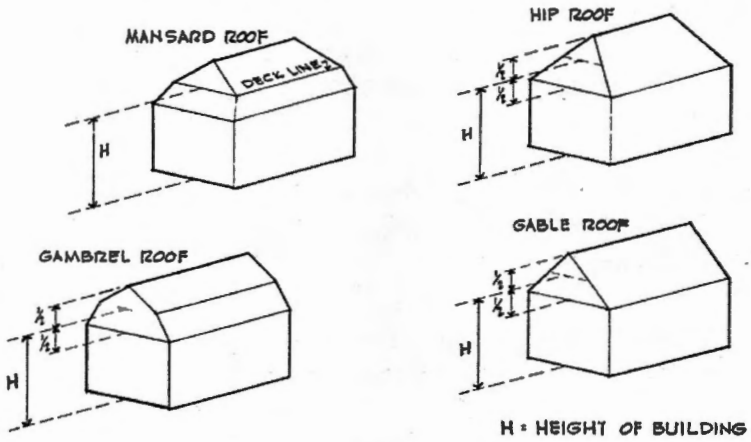

BUILDING LINE means a line established by an authority that runs parallel to a street line and is set at the closest point to a street that a building may be placed;

BUILDING CONTROL LINE means a conceptual line paralleling the centre line of a Protected Road at a distance perpendicular to the road in order to delineate the area for the application of these regulations; a Protected Road is a road designated under the *Protected Road Zoning Regulations, 1996* under the *Urban and Rural Planning Act, 2000;*

BOARD except in Part IX, means an appeal board established under section 40;

COUNCIL means a council as defined in the Town of Corner Brook Act, Town of Mount Pearl Act, Municipalities Act, 1999 and the Town council as defined in the Town of St. John's Act;

COURT unless the context indicates otherwise, means the Trial Division;

DECK means a raised structure that has a walking surface within one storey of the established grade at the ground level of that face of the building, which may or may not be attached to a main building, which does not have a permanent roof.

DEPARTMENT means the department presided over by the minister responsible for the *Urban and Rural Planning Act* (the Act);

DEVELOPMENT means the carrying out of building, engineering, mining or other operations in, on, over or under land, or the making of a material change in the use, or the intensity of use of land, buildings or premises and the:

(i) making of an access onto a highway, road or way,

(ii) erection of an advertisement or sign,

(iii) construction of a building,

(iv) parking of a trailer, or vehicle used for the sale of refreshments or merchandise, or as an office, or for living accommodation, and excludes the

(v) carrying out of works for the maintenance, improvement or other alteration of a building, being works which affect only the interior of the building or which do not materially affect the external appearance or use of the building,

(vi) carrying out by a highway authority of works required for the maintenance or improvement of a road, being works carried out on land within the boundaries of the road reservation,

(vii) carrying out by a local authority or statutory undertakers of works for the purpose of inspecting, repairing or renewing sewers, mains, pipes, cables or other apparatus, including the breaking open of street or other land for that purpose, and

(viii) use of a building or land within the courtyard of a dwelling house for a purpose incidental to the enjoyment of the dwelling house as a dwelling;

DEVELOPMENT REGULATIONS means these regulations and regulations and by-laws respecting development that have been enacted by the relevant authority; and development regulations means regulations made under sections 34 to 38;

DISCRETIONARY USE means a use that is listed within the discretionary use classes established in the use zone tables of an authority's development regulations;

DWELLING UNIT: means a self-contained unit consisting of one or more habitable rooms used or designed as an independent and separate housekeeping establishment or living quarters for one household, including kitchen and sitting, sleeping and sanitary facilities, which is used permanently or semi-permanently; and does not include a coach or rail car, mobile home, or any vehicle.

ESTABLISHED GRADE means,

(i) where used in reference to a building, the average elevation of the finished surface of the ground where it meets the exterior or the front of that building exclusive of any artificial embankment or entrenchment, or

(ii) where used in reference to a structure that is not a building, the average elevation of the finished grade of the ground immediately surrounding the structure, exclusive of any artificial embankment or entrenchment;

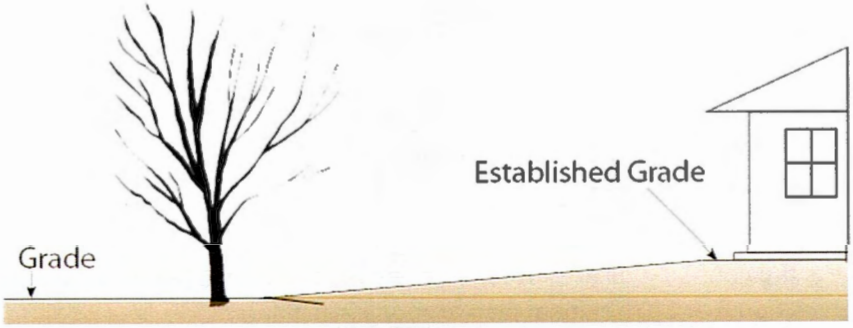

FLOOR AREA means the total area of all floors in a building measured to the outside face of exterior walls;

FRONTAGE means the horizontal distance between side lot lines measured at the building line;

LAND includes land covered by water and buildings and structures on, over, under the soil and fixtures that form part of those buildings and structures;

LOT means a plot, tract or parcel of land which can be considered as a unit of land for a particular use or building;

LOT AREA means the total horizontal area within the lines of the lot;

LOT COVERAGE means the combined area of all building on a lot measured at the level of the lowest floor above the established grade and expressed as a percentage of the total area of the lot;

MINISTER means the minister appointed under the *Executive Council Act* to administer this Act;

MUNICIPALITY includes a Town incorporated under the Town of Corner Brook Act, Town of Mount Pearl Act and the Town of St. John's Act and a municipality as defined in the Municipalities Act, 1999;

NON-CONFORMING USE means a legally existing use that is not listed as a permitted or discretionary use for the use zone in which it is located or which does not meet the development standards for that use zone;

NUISANCE means anything that is obnoxious, offensive or interferes with the use or enjoyment of property, endangers personal health or safety, or is offensive to the senses. This could include that which creates or is liable to create a nuisance through emission of noise, smoke, dust, odour, heat, light, fumes, fire or explosive hazard; results in the unsightly or unsafe storage of goods, salvage, junk, waste or other materials; poses a hazard to health and safety; or adversely affects the amenities of the neighbourhood or interferes with the rights of neighbours to the normal use and enjoyment of any land or building;

OWNER means a person or an organization of persons owning or having the legal right to use the land under consideration;

PERMITTED USE means a use that is listed within the permitted use classes set out in the use zone tables of an authority's development regulations;

PLAN, unless the context indicates otherwise, means a regional plan and a municipal plan established under section 8 or 10; (regional plan or municipal plan);

PLANNING AREA , unless the context indicates otherwise, means a regional planning area and a municipal planning area established under sections 6 and 11;

PROHIBITED USE means a use that is not listed in a use zone within the permitted use classes or discretionary use classes or a use that an authority specifies as not permitted within a use zone;

RECREATION VEHICLE OR RECREATIONAL TRAILER means a vehicle or portable structure designed to provide temporary living accommodation which is either self-propelled or mounted on, or pulled by another vehicle, and includes a travel/holiday trailer, camper trailer, truck camper, motorhome, fifth wheel trailer, tent trailer, travel trailer, camper van or recreational trailer or other similar vehicle, but not a mobile home or mini-home. A converted bus is not a recreation vehicle;

REGION means a region as defined in the *Municipalities Act, 1999*;

REGIONAL AUTHORITY means a regional authority established under section 7 of the Act; scheme means a scheme established under section 29 of the Act;

SIGN means a word, letter, model, placard, board, device or representation, whether illuminated or not, in the nature of or employed wholly or in part for the purpose of advertisement, announcement or direction and excludes those things employed wholly as a memorial, advertisements of local government, utilities and boarding or similar structures used for the display of advertisements;

STREET means a street, road, highway or other way designed for the passage of vehicles and pedestrians and which is accessible by fire department and other emergency vehicles;

STREET LINE means the edge of a street reservation as defined by the authority having jurisdiction;

SUBDIVISION means the dividing of land, whether in single or joint ownership into 2 or more pieces for the purpose of development;

TOWN means a town as defined in the *Municipalities Act, 1999*;

USE means a building or activity situated on a lot or a development permitted on a lot;

USE ZONE OR ZONE means an area of land including buildings and water designated on the zoning map to which the uses, standards and conditions of a particular use zone table apply;

VARIANCE means a departure, to a maximum of 10% from the yard, area, lot coverage, setback, size, height, frontage or any other numeric requirement of the applicable Use Zone Table of the authority's regulations;

YARDS – (sometimes called lot lines) refer to the diagram below for an illustration of the following definitions:

FRONT YARD DEPTH otherwise called the building line or front yard setback, means setback from the street that the building is fronting on, shown as the front yard setback in the drawing below; note that the development controls indicate side yard and rear yard setbacks from the boundaries of the property;

REAR YARD DEPTH means the distance between the rear lot line and the rear wall of the main building on a lot;

SIDE YARD DEPTH means the distance between the side lot line and the nearest side wall of a building on the lot;

ZONING MAP means the map or maps attached to and forming a part of the authority's regulations.

APPENDIX 2: MINISTER'S DEVELOPMENT REGULATIONS

- UNDER THE *URBAN AND RURAL PLANNING ACT, 2000*

NEWFOUNDLAND AND LABRADOR
REGULATION 3/01

Development Regulations
under the
Urban and Rural Planning Act, 2000

(Filed January 2, 2001)

Under the authority of section 36 of the *Urban and Rural Planning Act , 2000,* I make the following regulations.

Dated at St. Johns , January 2, 2001 .

Joan Marie Aylward
Minister of Municipal and Provincial Affairs

REGULATIONS

Analysis

Short title

1. These regulations may be cited as the *Development Regulations.*

Back to Top

Definitions

2. In these regulations,

(a) "Act", unless the context indicate otherwise, means the *Urban and Rural Planning Act, 2000* ;

(b) "applicant" means a person who has applied to an authority for an approval or permit to carry out a development;

(c) "authority" means a council, authorized administrator or regional authority; and

(d) "development regulations" means these regulations and regulations and by-laws respecting development that have been enacted by the relevant authority.

Back to Top

Application

3. (1) These regulations shall be included in the development regulations of an authority and shall apply to all planning areas.

(2) Where there is a conflict between these regulations and development regulations or other regulations of an authority, these regulations shall apply.

(3) Where another Act of the province provides a right of appeal to the board, these regulations shall apply to that appeal.

Back to Top

Interpretation

4. (1) In development regulations and other regulations made with respect to a planning area the following terms shall have the meanings indicated in this section

(a) "access" means a way used or intended to be used by vehicles, pedestrians or animals in order to go from a street to adjacent or nearby land or to go from that land to the street;

(b) "accessory building" includes

(i) a detached subordinate building not used as a dwelling, located on the same lot as the main building to which it is an accessory and which has a use that is customarily incidental or complementary to the main use of the building or land,

(ii) for residential uses, domestic garages, carports, ramps, sheds, swimming pools, greenhouses, cold frames, fuel sheds, vegetables storage cellars, shelters for domestic pets or radio and television antennae,

(iii) for commercial uses, workshops or garages, and

(iv) for industrial uses, garages, offices, raised ramps and docks;

(c) "accessory use" means a use that is subsidiary to a permitted or discretionary use and that is customarily expected to occur with the permitted or discretionary use;

(d) "building height" means the vertical distance, measured in metres from the established grade to the

(i) highest point of the roof surface of a flat roof,

(ii) deck line of a mansard roof, and

(iii) mean height level between the eave and the ridge of a gable, hip or gambrel roof,

and in any case, a building height shall not include mechanical structure, smokestacks, steeples and purely ornamental structures above a roof;

(e) "building line" means a line established by an authority that runs parallel to a street line and is set at the closest point to a street that a building may be placed;

(f) "discretionary use" means a use that is listed within the discretionary use classes established in the use zone tables of an authoritys development regulations;

(g) "established grade" means,

(i) where used in reference to a building, the average elevation of the finished surface of the ground where it meets the exterior or the front of that building exclusive of any artificial embankment or entrenchment, or

(ii) where used in reference to a structure that is not a building, the average elevation of the finished grade of the ground immediately surrounding the structure, exclusive of any artificial embankment or entrenchment;

(h) "floor area" means the total area of all floors in a building measured to the outside face of exterior walls;

(i) "frontage" means the horizontal distance between side lot lines measured at the building line;

(j) "lot" means a plot, tract or parcel of land which can be considered as a unit of land for a particular use or building;

(k) "lot area" means the total horizontal area within the lines of the lot;

(l) "lot coverage" means the combined area of all building on a lot measured at the level of the lowest floor above the established grade and expressed as a percentage of the total area of the lot;

(m) "non-conforming use" means a legally existing use that is not .listed as a permitted or discretionary use for the use zone in which it is located or which does not meet the development standards for that use zone;

(n) "owner" means a person or an organization of persons owning or having the legal right to use the land under consideration;

(o) "permitted use" means a use that is listed within the permitted use classes set out in the use zone tables of an authoritys development regulations;

(p) "prohibited use" means a use that is not listed in a use zone within the permitted use classes or discretionary use classes or a use that an authority specifies as not permitted within a use zone;

(q) "sign" means a word, letter, model, placard, board, device or representation, whether illuminated or not, in the nature of or employed wholly or in part for the purpose of advertisement, announcement or direction and excludes those things employed wholly as a memorial, advertisements of local government, utilities and boarding or similar structures used for the display of advertisements;

(r) "rear yard depth" means the distance between the rear lot line and the rear wall of the main building on a lot;

(s) "side yard depth" means the distance between the side lot line and the nearest side wall of a building on the lot;

(t) "street" means a street, road, highway or other way designed for the passage of vehicles and pedestrians and which is accessible by fire department and other emergency vehicles;

(u) "street line" means the edge of a street reservation as defined by the authority having jurisdiction;

(v) "use" means a building or activity situated on a lot or a development permitted on a lot;

(w) "use zone" or "zone" means an area of land including buildings and water designated on the zoning map to which the uses, standards and conditions of a particular use zone table apply;

(x) "variance" means a departure, to a maximum of 10% from the yard, area, lot coverage, setback, size, height, frontage or any other numeric requirement of the applicable Use Zone Table of the authoritys regulations; and

(y) "zoning map" means the map or maps attached to and forming a part of the authoritys regulations.

(2) An authority may, in its discretion, determine the uses that may or may not be developed in a use zone and those uses shall be listed in the authoritys regulations as discretionary, permitted or prohibited uses for that area.

Back to Top

Notice of right to appeal

5. Where an authority makes a decision that may be appealed under section 42 of the Act, that authority shall, in writing, at the time of making that decision, notify the person to whom the decision applies of the

(a) persons right to appeal the decision to the board;

(b) time by which an appeal is to be made;

(c) right of other interested persons to appeal the decision; and

(d) manner of making an appeal and the address for the filing of the appeal.

Back to Top

Appeal requirements

6. (1) The secretary of the board at the Department of Municipal and Provincial Affairs, Main Floor, Confederation Building (West Block), P.O. Box 8700, St. Johns, Nfld., A1B 4J6 is the secretary to all boards in the province and an appeal filed with that secretary within the time period referred to in subsection 42(4) of the Act shall be considered to have been filed with the appropriate board.

(2) Notwithstanding subsection (1), where the City of Corner Brook , City of Mount Pearl or City of St. Johns appoints an appeal board under subsection 40(2) of the Act, an appeal shall be filed with the secretary of that appointed board.

(3) The fee required under section 44 of the Act shall be paid to the board that hears the decision being appealed by filing it with the secretary referred to in subsection (1) or (2) within the 14 days referred to in subsection 42(4) of the Act.

(4) The board that hears the decision being appealed shall, subject to subsection 44(3) of the Act, retain the fee paid to the board.

(5) Where an appeal of a decision and the required fee is not received by a board in accordance with this section and Part VI of the Act, the right to appeal that decision shall be considered to have been forfeited.

Back to Top

Appeal registration

7. (1) Upon receipt of an appeal and fee as required under the Act and these regulations, the secretary of the board as referred to in subsections 6(1) and (2), shall immediately register the appeal.

(2) Where an appeal has been registered the secretary of the board shall notify the appropriate authority of the appeal and shall provide to the authority a copy of the appeal and the documentation related to the appeal.

(3) Where an authority has been notified of an appeal that authority shall forward to the appropriate board a copy of the application being appealed, all correspondence, council minutes, plans and other relevant information relating to the appeal including the names and addresses of the applicant and other interested persons of whom the authority has knowledge.

(4) Upon receipt of the information under subsection (3), the secretary of the board shall publish in a newspaper circulated in the area of the appropriate authority, a notice that the appeal has been registered.

(5) A notice published under subsection (4) shall be published not fewer than 2 weeks before the date upon which the appeal is to be heard by the board.

Back to Top

Development prohibited

8. (1) Immediately upon notice of the registration of an appeal the appropriate authority shall ensure that any development upon the property that is the subject of the appeal ceases.

(2) Sections 102 and 104 of the Act apply to an authority acting under subsection (1).

(3) Upon receipt of a notification of the registration of an appeal with respect to an order under section 102 of the Act, an authority shall not carry out work related to the matter being appealed.

Back to Top

Hearing notice and meetings

9. (1) A board shall notify the appellant, applicant, authority and other persons affected by the subject of an appeal of the date, time and place for the appeal not fewer than 7 days before the date scheduled for the hearing of the appeal.

(2) A board may meet as often as is necessary to conduct its work in an expeditious manner.

Back to Top

Hearing of evidence

10. (1) A board shall meet at a place within the area under its jurisdiction and the appellant and other persons notified under subsection 9(1) or their representative may appear before the board and make representations with respect to the matter being appealed.

(2) A board shall hear an appeal in accordance with section 43 of the Act and these regulations.

(3) A written report submitted under subsection 43(2) of the Act respecting a visit to and viewing of a property shall be considered to have been provided in the same manner as evidence directly provided at the hearing of the board.

(4) In the conduct of an appeal hearing, the board is not bound by the rules of evidence.

Back to Top

Board decision

11. A decision of the board must comply with the plan, scheme or development regulations that apply to the matter that has been appealed to that board.

Back to Top

Variances

12. (1) Where an approval or permit cannot be given by an authority because a proposed development does not comply with development standards set out in development regulations, an authority may, in its discretion, vary the applicable development standards to a maximum of 10% if, in the authoritys opinion, compliance with the development standards would prejudice the proper development of the land, building or structure in question or would be contrary to public interest.

(2) An authority shall not allow a variance from development standards set out in development regulations if that variance, when considered together with other variances made or to be made with respect to the same land, building or structure, would have a cumulative effect that is greater than a 10% variance even though the individual variances are separately no more than 10%.

(3) An authority shall not permit a variance from development standards where the proposed development would increase the non conformity of an existing development.

Back to Top

Notice of variance

13. Where an authority is to consider a proposed variance, that authority shall give written notice of the proposed variance from development standards to all persons whose land is in the immediate vicinity of the land that is the subject of the variance.

Back to Top

Residential non conformity

14. A residential building or structure referred to in paragraph 108(3)(g) of the Act must, where being repaired or rebuilt, be repaired or rebuilt in accordance with the plan and development regulations applicable to that building or structure.

Back to Top

Notice and hearings on change of use

15. Where considering a non conforming building, structure or development under paragraph 108(3)(d) of the Act and before making a decision to vary an existing use of that non-conforming building, structure or development, an authority, at the applicants expense, shall publish a notice in a newspaper circulating in the area or by other means give public notice of an application to vary the existing use of a non-conforming building, structure or development and shall consider any representations or submissions received in response to that advertisement.

Back to Top

Non-conformance with standards

16. Where a building, structure or development does not meet the development standards included in development regulations, the building, structure or development shall not be expanded if the expansion would increase the non-conformity and an expansion must comply with the development standards applicable to that building, structure or development.

Back to Top

Discontinuance of non-conforming use

17. An authority may make development regulations providing for a greater period of time than is provided under subsection 108(2) of the Act with respect to the time by which a discontinued non-conforming use may resume operation.

Back to Top

Delegation of powers

18. An authority shall, where designating employees to whom a power is to be delegated under subsection 109(3) of the Act, make that designation in writing.

Back to Top

Commencement

19. These regulations shall be considered to have come into force on January 1, 2001 .

APPENDIX 3: LAND USE ZONING MAP