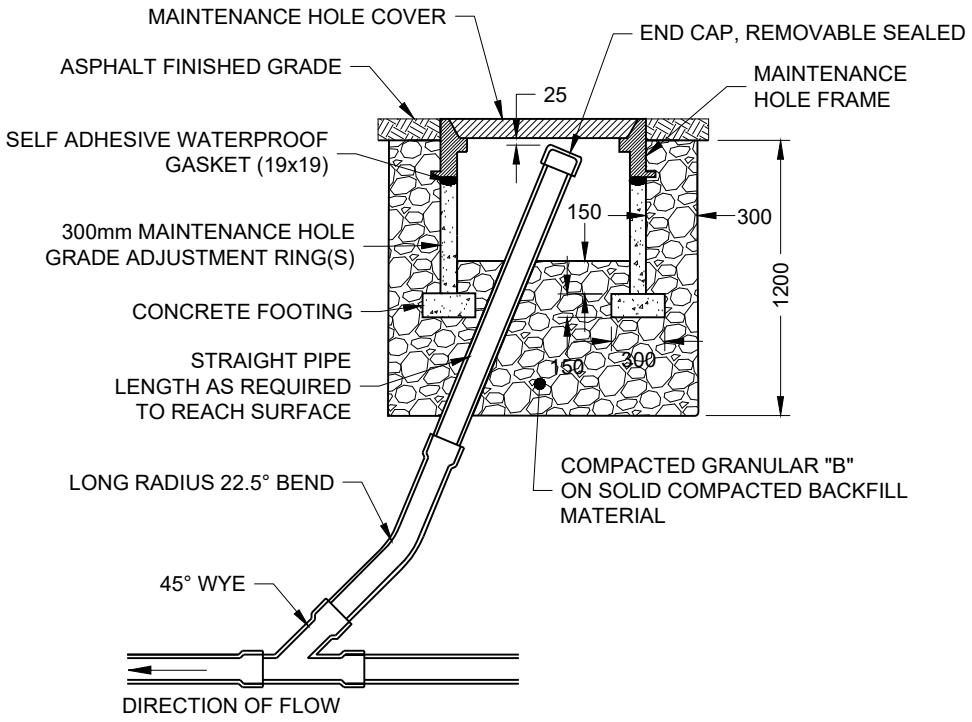

CLEAN OUT IN ASPHALT

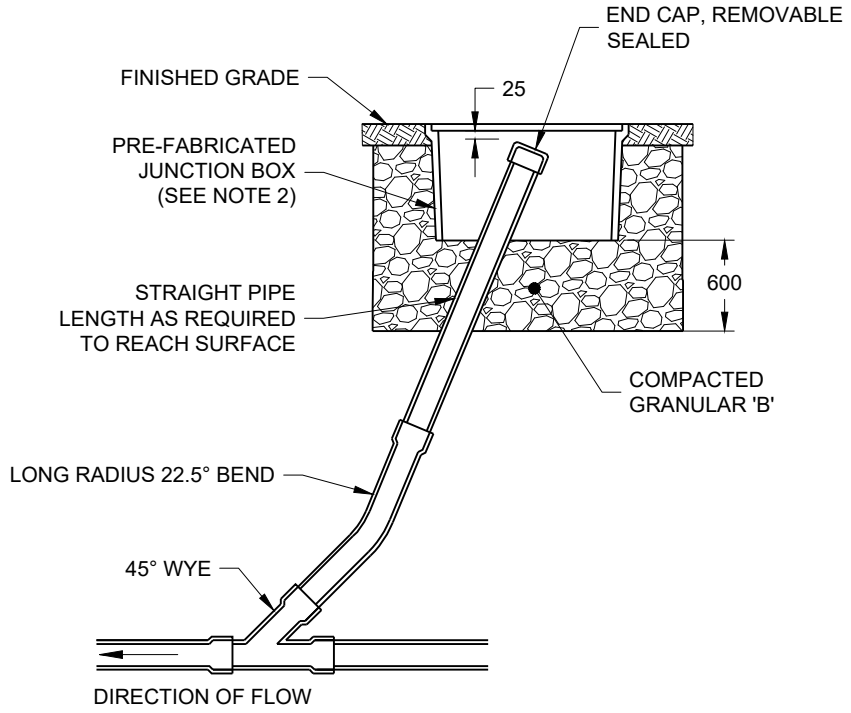

CLEAN OUT IN SIDEWALK OR GRASS USING A PREFAB JUNCTION BOX

NOTES:

1. COVER TO BE FLUSH WITH FINISHED GRADE.
2. 22,500lb LOAD RATED COVER, NO LOGO, BLACK.
3. ALL DIMENSIONS IN MILLIMETERS UNLESS OTHERWISE NOTED.

MUNICIPAL MASTER SPECIFICATIONS	SEWER CLEAN OUT DETAILS	DRAWING NUMBER 04340	DATE: APRIL 2023 SCALE: N.T.S.