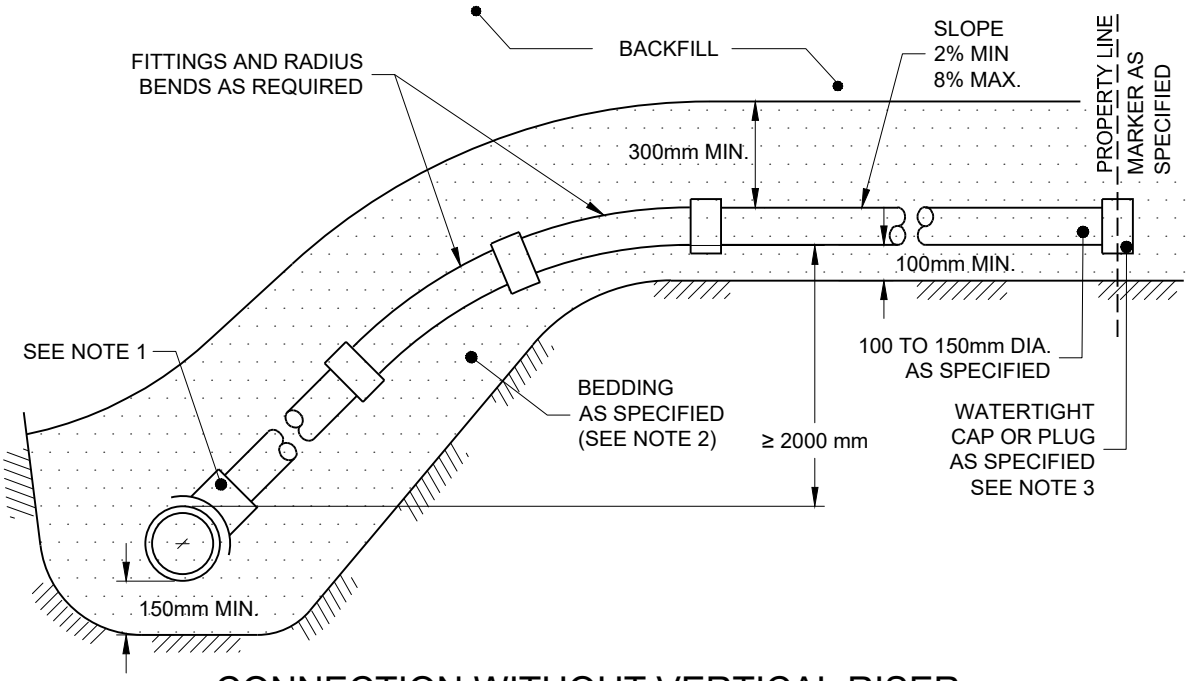

CONNECTION WITHOUT VERTICAL RISER

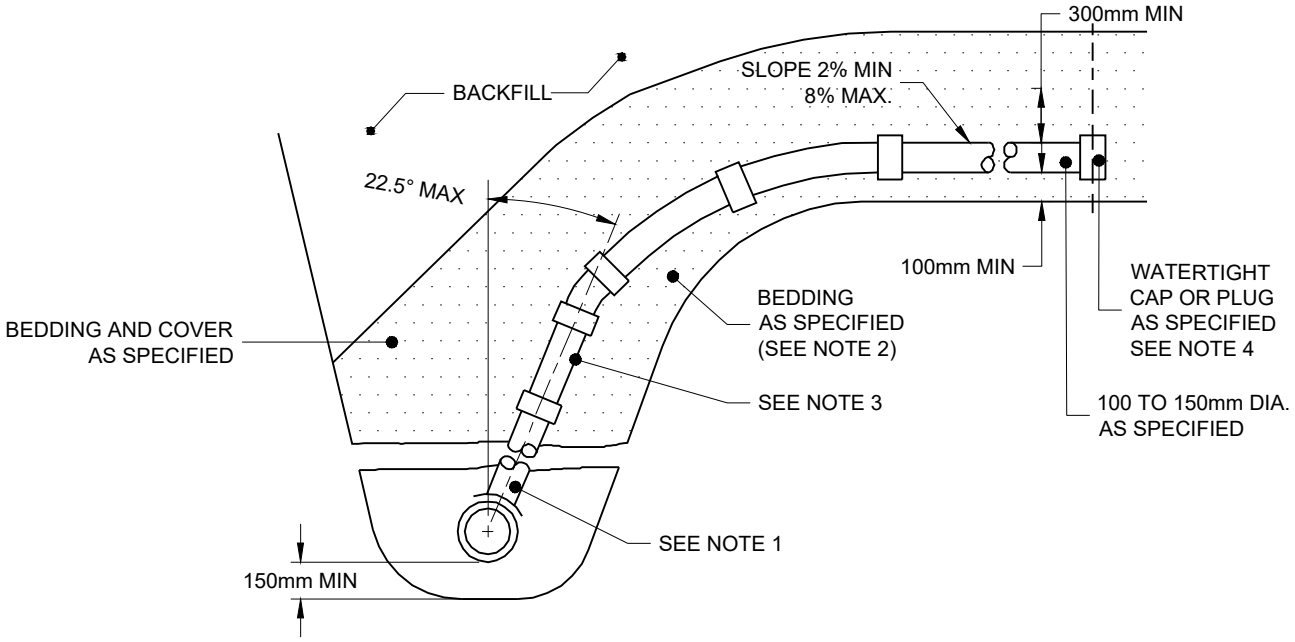

CONNECTION WITH VERTICAL RISER

NOTES:

1. SEWER SERVICE CONNECTIONS TO THE MAIN PIPE SEWER SHALL BE MADE USING FACTORY MADE TEES, STRAP-ON-SADDLES, OR OTHER APPROVED SADDLES. AS PER SPECIFICATION SECTION 02702.
2. BEDDING MATERIAL SHALL BE TYPE 1 FOR PVC, AND TYPE 3 FOR DUCTILE IRON PIPES.
3. VERTICAL RISERS SHALL BE AS SPECIFIED.
4. CAP OR PLUG AT PROPERTY LINE SHALL BE ADEQUATELY BRACED.
5. MAINTENANCE HOLES SHALL BE USED AT THE MAIN SEWER TO CONNECT SERVICE CONNECTIONS GREATER THAN OR EQUAL TO 200mm.
6. FOR NEW CONSTRUCTION, SADDLES SHALL BE INSTALLED ON THE MAIN PIPE BEFORE THAT PIPE IS LAID.
7. APPROVED CUT-IN TOOL SHALL BE USED FOR FIELD MADE CONNECTIONS.
8. ALL DIMENSIONS ARE IN MILLIMETERS UNLESS OTHERWISE NOTED.

MUNICIPAL MASTER SPECIFICATIONS	SEWER SERVICE CONNECTIONS FOR RIGID MAIN PIPE SEWER	
	DRAWING NUMBER 04480	DATE: APRIL 2023
		SCALE: N.T.S.